DEPARTMENT OF ENVIRONMENTAL QUALITY
AIR QUALITY DIVISION
ACTIVITY REPORT: On-site Inspection

P078864630

FACILITY: ZFS Ithaca, LLC		**SRN / ID:** P0788
LOCATION: 1266 E. Washington Road, ITHACA		**DISTRICT:** Lansing
CITY: ITHACA		**COUNTY:** GRATIOT
CONTACT: Kimberly James , EHS Manager		**ACTIVITY DATE:** 08/05/2022
STAFF: Michelle Luplow	**COMPLIANCE STATUS:** Compliance	**SOURCE CLASS:** MAJOR
SUBJECT: Scheduled, announced, onsite inspection to determine compliance with PTI 20-17D		
RESOLVED COMPLAINTS:		

Inspected by: Michelle Luplow

Personnel Present: Kimberly James, EHS Manager (Kimberly.james@zfsithaca.com)

Nate Donahey, Plant Manager (nathand@zfsithaca.com)

Other ZFS Staff: Brandon LaRosa, Environmental Engineer (brandonl@zfsinc.com)

Bridgette Rillema, Environmental Manager (bridgetter@zfsinc.com)

Purpose

Conduct an announced, onsite, partial compliance evaluation (PCE) inspection by determining compliance with ZFS Ithaca's Permit No. 20-17D. This inspection was conducted as part of a full compliance evaluation (FCE).

Facility Background/Regulatory Overview

ZFS Ithaca is a new Title V major source for NOx, VOC, and PM and a new major source of HAPS (hexane).

The majority of ZFS Ithaca operations fall into 2 categories: 1) grain receiving and handling and 2) soybean oil extraction processes. The grain receiving/handling operations permitted under FGHANDLING are subject to the NSPS Subpart DD, Standards of Performance for Grain Elevators, and the soybean oil extraction process permitted under FGEXTRACTION is subject to the NESHAP Subpart GGGG, Solvent Extraction for Vegetable Oil Production.

The 2 natural gas-fired boilers are subject to the NSPS Subpart Dc and the NESHAP Boiler MACT Subpart DDDDD.

An administratively complete ROP application is required to be submitted within 12 months of commencing trial operations. Trial operations commenced February 20, 2020, and an administratively complete initial ROP application was received February 10, 2021. The initial ROP application is currently undergoing technical review.

The following PTI's will be used to create ZFS' Initial ROP: PTI No. 20-17; PTI No. 20-17A; PTI No. 20-17B; PTI No. 20-17C; PTI No. 20-17D.

PTI No. 20-17 was issued January 30, 2017 to permit ZFS Ithaca for grain receiving, grain handling, grain drying, grain storage, and grain shipping (Phase 1). PTI No. 20-17A was issued to permit Phase 2 of construction: soybean oil extraction and related soybean processing emission units. PTI No. 20-17B was issued to repermit stack heights for EUMEALGRINDING, SVSHIPRECEIVE, SVEXTRACTION and SVLOADOUT.

EUDRYING1 was stack tested in June 2020 for NOx, CO and PM. During testing it was determined that EUDRYING1 was not meeting the CO emission limits; therefore, PTI No. 20-17C was issued to increase the CO emission limit for EUDRYING1.

PTI No. 20-17D was issued to increase throughput limits for EUDRYING1, EUSHIPRECEIVE, and FGEXTRACTION; to change the stack diameters for the 5 vents on EUDRYING1, SVSHIPRECEIVE, and SVDC; and to reduce the minimum stack height on each cooling tower stack. ZFS Ithaca currently has plans to increase its production rate (as allowed in PTI 20-17D) by April 2023. At this time, FGEXTRACTION is the bottleneck for being able to process beans at the increased production rate. The hexane pump is not performing like it is supposed to and therefore ZFS Ithaca cannot pump more hexane to increase production. Once the pump is installed and operating properly ZFS Ithaca will plan to retest the equipment at the permitted increased production rate.

Inspection

At approximately 8:30 a.m. on August 5, 2022 I met with Kim James and Nate Donahey to conduct an inspection of the ZFS Ithaca facility and to determine compliance with PTI 20-17D.

Table 1 contains a list of all equipment present onsite.

Table 1. Equipment List

Equipment	Description	Installation dates	Date of Startup
EUSHIPRECEIVE (FGHANDLING)	Grain unloading (receiving) via truck and rail, (truck and rail housed in same building). Baghouse control	April 3, 2017	July 22, 2019
EUHANDLING (FGHANDLING)	Grain handling (bucket elevators, enclosed conveyors, enclosed distributor). Oil suppression control.	April 3, 2017	July 22, 2019
EUBINS (FGHANDLING)	Grain storage bins and silos.	April 3, 2017	July 22, 2019
EUDRYING1	Rack dryer with two 33-MMBtu/hr max heat input burners	October 10, 2019	October 10, 2019
EUROADS	Onsite vehicle traffic	NA	NA
EUBOILERS1 & 2 (FGBOILERS)	Natural gas-fired boilers, each rated at 95 MMBtu/hr maximum heat input	November 11, 2019	November 11, 2019
EUPREP	Soybean preparation processes for extraction	February 10, 2020	February 10, 2020
EUHULLGRINDING	2 hammermills for soybean hull grinding	February 10, 2020	February 10, 2020

EUPELLETIZING	**Hull pelletizing systems**	**February 19, 2020**	**February 19, 2020**
EUMEALGRINDING	**Meal grinding operations**	**February 10, 2020**	**February 10, 2020**
EUEXTRACTION (FGEXTRACTION)	**Soybean oil extraction, including mineral oil adsorption system as control**	**February 10, 2020**	**February 10, 2020**
EUDC (FGEXTRACTION)	**3 meal dryers, 1 meal cooler**	**February 10, 2020**	**February 10, 2020**
EUTANKS1, 2, 3 (FGEXTRACTION)	**Three hexane storage tanks, each with 27,000-gallon capacity, vented to extraction system for control**	**December 20, 2019**	**February 5, 2020**
EUMEALSTORAGE (FGEXTRACTION)	**Indoor storage of crude soybean meal**	**February 10, 2020**	**February 10, 2020**
EUHULLSTORAGE (FGLOADSTORE)	**4 steel bins for hull storage**	**February 10, 2020**	**February 10, 2020**
EUHULLLOADOUT (FGLOADSTORE)	**Soybean hull truck and rail loadout controlled by baghouse**	**February 17, 2020**	**February 17, 2020**
EULOADOUT (FGLOADSTORE)	**6 overhead bins and truck/rail loadout operations for soybean meal. Controlled by baghouse.**	**February 17, 2020**	**February 17, 2020**
EUINGREDIENTS (FGLOADSTORE)	**Receiving ingredients by truck and rail**	**June 15, 2020**	**June 15, 2020**
EUCOOLINGTWR	**Draft cooling tower, equipped with mist eliminators**	**NA**	**February 2020**

EUDRYING1

Rack grain dryer used to dry soybeans down to a preferred moisture content. Dryer has 5 exhaust stacks. EUDRYING1 was not operating during the inspection.

There are currently no Process/Operational Restrictions for EUDRYING1.

Emission Limits & Testing/Sampling

EUDRYING1 has PM, PM10, PM2.5, NOx, CO and visible emission limits. The lb/hr limits outlined in the permit are for all stacks combined and the permit allows ZFS to test emission rates from a single representative exhaust stack of EUDRYING1 to determine compliance with the limit. The results from the single stack are then multiplied by 5 for total lb/hr results from all stacks combined (multiplying by 5 does not apply to the 0.10 lb/1000 lb exhaust gases limit).

Testing is required to be conducted upon request of the AQD. ZFS Ithaca conducted an initial performance test in June 2020. Table 2 contains a list of the pollutants, their limits, and test results from the June 2020 testing event. The June 2020 Test results presented in Table 2 for PM10, PM2.5, NOx, and CO are representative of emissions from all 5 stacks combined (i.e., the results from one stack were multiplied by 5 to produce the total emissions presented in Table 2).

Table 2. June 2020 Stack Test Data

Pollutant	Emission Limit	June 2020 Test Results	Compliance Status
PM	0.10 lb/1000 lb exhaust gas	0.003 lb/1000 lb	Compliance
PM10	12.5 lb/hr	2.80	Compliance
PM2.5	9.38 lb/hr	<2.35	Compliance
NOx	6.60 lb/hr	2.05	Compliance
CO	11.75 lb/hr (new limit established via PTI 20-17C)	5.85 (as reported in test report) 5.92 (as reported by TPU)	Compliance

ZFS Ithaca is required to conduct visible emissions testing, as required by the NSPS Subpart DD, within 60 days after achieving the maximum production rate, but not later than 180 days after commencement of initial startup. Testing of this unit took place June 11, 2020. Initial startup commenced on October 10, 2019. At that time, through the winter, ZFS Ithaca was not receiving enough grain to be dried. The spring and early summer 2020 also did not allow for testing because of safety considerations associated with the COVID-19 pandemic and therefore, ZFS Ithaca was under AQD COVID-19 enforcement discretion to complete the NSPS Subpart DD visible emission testing until a time at which it could be safely done during the COVID-19 pandemic. The timing of their test on this

unit is acceptable to AQD. The visible emissions test report was received August 27, 2020. The report states that there were no visible emissions seen during the testing of EUDRYING1, and all reviewed VE data demonstrated such. I was not able to verify this as I was not onsite for the EUDRYING1 test, but during the July 29, 2020 visit I did not see any signs of opacity from the dryer exhaust stacks.

EUDRYING1 was not operating during this inspection in order to confirm visible emissions were 0%.

Material Limits & Monitoring/Recordkeeping

EUDRYING1 is limited to 20,000,000 bushels of throughput per 12-month rolling time period as determined at the end of each calendar month, and ZFS Ithaca is required to track the throughput of grain dried. Note that the limit prior to June 1, 2022 (issuance of PTI 20-17D) was 16,000,00 bushels per 12-month rolling period.

ZFS Ithaca provided monthly and 12-month rolling records from July 2020 – June 2022, attached. The 12-month rolling period with the highest throughput was November 2019 – October 2020 at 4,064,156 bushels. ZFS Ithaca is in compliance with the grain throughput limits at this time.

Design/Equipment Parameters

The maximum design heat input capacity for the burners on EUDRYING1 shall not exceed 66.0 MMBtu/hr total for both burners. ZFS Ithaca provided manufacturer documentation (attached), demonstrating that the max heat input rating for each burner is 34 MMBtu/hr and therefore the total is 68.0 MMBtu/hr for both burners combined. ZFS Ithaca noted that the burners are in excess of the 66.0 MMBTU/hr rating and they have provided a written commitment to apply for a Permit to Modify EUDRYING1 burner ratings*. Failure to apply for this modification may result in a violation.*

A device to monitor the amount of grain processed through EUDRYING1 on a monthly basis is required to be installed, calibrated, maintained and operated in a satisfactory manner. ZFS Ithaca provided the following explanation for determining quantity of grain processed through the grain dryer:

"Grain drying quantity is based on the extraction rate of the dryer. The operator selects the extraction rate from the control room. The extraction rate is the amount of time grain remains in one section of the dryer before moving to the next section of the dryer. The dryer manufacturer has provided a chart which correlates extraction rate to grain throughput rate. The chart below shows some of the common extraction rates used, and the corresponding grain throughput rate. The operators monitor how long the dryer runs at the extraction rate to calculate total grain throughput. Therefore, there is no calibration or specific device used to monitor grain throughput of the dryer, and it is instead calculated based on the overall operation of the dryer."

For example, an Extraction Rate of 90 seconds means that every 90 seconds grain is released from the dryer. The length of the extraction rate is what will determine how long the beans are in there drying. All rate changes are recorded to determine total production rate.

Extraction Rate (Time between extractions) (seconds)[1]	Grain Rate (Bushels Soybeans/hr)[1]	Estimated time of Extraction (seconds)[1]	Total Time between extraction (seconds)	Extraction size (bushels)
56	10,254.8	5	61	173.8
63	9,329.4	5	68	176.2

65	9,140.8	5	70	177.7
90	6,898.6	5	95	182.0
116	5,536.5	5	121	186.1
143	4,618.9	5	148	189.9

[1] These data are directly obtained from the manufacturer

At this time, it is my professional judgment that this method for determining grain throughput for EUDRYING1 is acceptable, and meets the intent of the permit condition.

Stack/Vent Restrictions

There are 5 rectangular stacks from which emissions from EUDRYING1 are vented. Each of the stacks has a flap that closes while the grain is being extracted from the dryer. Three seconds before the extraction of grain, shutters stop the air flow, extraction takes place, and then 3 seconds later the shutters open again and drying resumes. There is no movement of air when the grain is in movement. This information was obtained from B. Rillema as well as a video explaining the drying process, which can be found at https://vimeo.com/427570898/b69f253734. B. Rillema also said that natural gas is not combusted when the flaps are closed. There should be no emissions generated in the drying (PM or natural gas combustion products) from the stacks during flap closure.

Exhaust gases from the stacks are required to be discharged unobstructed vertically upwards to the ambient air. The flaps on the dryer do not open up to ambient air completely; there is ~10-20% angle of closure when the flaps are open to exhaust air. Michelle Rogers and I discussed with AQD modeler, Stephanie Hengesbach, and supplied the dryer vimeo video to her to evaluate whether there was a possible obstruction of air flow due to the flaps. Per her note below, the exhaust gases appear buoyant enough that the exhaust air flow does not appear to be obstructed by the flaps:

“With the plume being so buoyant, I do feel vertically unobstructed is appropriate. The vents seem to open fully and don’t seem to hamper the plumes vertical motion. Often for vents we use area sources; however, in this case it wouldn’t be appropriate since area sources do not take into consideration vertical motion of a plume. Jim [Haywood] and I did discuss the video and the plume, and we are in agreement.”

EUROADS

EUROADS addresses fugitive dust from on-site vehicle traffic. Opacity is limited to 5% and ZFS Ithaca was required to submit a nuisance minimization plan for fugitive dust within 60 days of PTI 20-17 issuance (September 2017). The nuisance minimization plan was received June 2018 (late) and was reviewed, with a final version of the plan approved by AQD in July 2018.

While onsite all paved roads were well-maintained. I saw no fugitive dust while onsite from the roadways caused by neither wind nor truck traffic.

N. Donahey showed me the sweeper ZFS Ithaca owns. He said that they run the sweeper at least twice per day in order to maintain the roads properly. The sweeper does not use water, but uses an enclosed bucket to capture and collect dust as the rotary broom sweeps the paved portions of the road.

Weekly, non-certified visible emission observations are required to be kept. According to their records, ZFS Ithaca conducts daily visible emission observations. Per my request, they supplied me with these records for the month of November 2021 (see attached). All records indicate that there were no dust issues during the month of November 2021.

EUPREP

All soybeans that are processed through EUPREP are also run through EUEXTRACTION. EUPREP represents a conglomerate of over 20 pieces of equipment with associated dust control systems to prepare the soybeans for oil extraction processes. SVPREP is EUPREP's stack with an associated "main exhaust filter." Whole bean cleaning and aspiration; hull cleaning and aspiration; and soybean cascade coolers and dryers all have cyclones that exhaust to the main exhaust filter, prior to exhausting through SVPREP.

All stages of the EUPREP process were operating during the inspection. Table 4 contains a list of the processes and the observed operating parameters during the inspection.

During the stack test, maximum routine operations for EUPREP were established at 206.67 tons per hour. During the inspection, a throughput of 161 tons per hour was being processed. ZFS Ithaca appears to be processing at or below maximum routine at the time of inspection.

N. Donahey said the bags in the baghouses are inspected during every shut down (twice per year). Bags are replaced when the filters are caked with dust/moist or if there is a high pressure differential.

Emission Limits, Testing/Sampling & Monitoring/Recordkeeping

EUPREP has PM, PM10, PM2.5, and visible emissions limits. Initial testing on EUPREP was conducted July 28 – 29, 2020. The test report was received October 8, 2020 and indicated compliance with EUPREP Emission Limits and visible emission limits. With the issuance of PTI 20-17D, ZFS Ithaca is required to test for PM, PM10 and PM 2.5 within 60 days of achieving maximum production rate through the permitted equipment. ZFS Ithaca plans to achieve maximum production rate in April 2023 if all equipment needed to make the production upgrades is received in a timely manner.

Pollutant	Emission Limit	July 2020 Test Results	Compliance Status
PM	**0.0153 gr/dscf** **16.17 lb/hr**	**0.0032 gr/dscf** **2.60 lb/hr**	Compliance
PM10	9.44 lb/hr	<3.61 lb/hr	Compliance
PM2.5	8.09 lb/hr	<3.51 lb/hr	Compliance

I did not observe any visible emissions from SVPREP during the inspection. ZFS Ithaca is required to conduct and record weekly non-certified visible emission observations from SVPREP. As requested, ZFS Ithaca provided me with weekly August 2021 readings. Records indicate compliance with the 10% limit from SVPREP during this time, see attached.

Process/Operational Restrictions, Design/Equipment Parameters & Monitoring/Recordkeeping

A Malfunction Abatement Plan (MAP) used to identify normal operating ranges of air cleaning devices, required maintenance, etc, is required to be submitted prior to startup of EUPREP. The initial MAP was received via email January 14, 2020. ZFS Ithaca submitted an updated MAP via email (February 8, 2021 revision) received February 17, 2021. The MAP was reviewed and approved.

All control devices associated with the equipment listed in Table 4 is required to be installed, maintained, and operated in a satisfactory manner. Satisfactory operation includes operating the baghouses (with fabric filters) within the ranges specified in the MAP. Table 4 lists the control device operating ranges specified in the 2/8/21 MAP. Note that all equipment in this table exhausts through SVPREP; however, some of the equipment exhausts to a cyclone before exhausting through the main fabric filter of the SVPREP stack, while other pieces of equipment exhaust to a baghouse and then to the main exhaust filter prior to exhausting from SVPREP. The MAP does not specify proper operating ranges for the cyclones as there are no pressure gauges associated with these, but notes that if opacity above the 10% limit is seen from SVPREP, the entire exhaust system is investigated to determine where the source of the opacity is.

During the inspection I recorded pressure drops on the main exhaust filter and Jet Dryer A & B baghouses. All pressure drop readings were in compliance with the operating ranges established in the MAP. B. LaRosa explained that 0.5" (low-end of the pressure drop operating range) is typically seen when the bags in the baghouse are first replaced.

ZFS Ithaca is required to monitor the pressure drop continuously and to record the pressure drop on a daily basis for each fabric filter in EUPREP (main exhaust filter and Jet Dryer A & B exhaust filters). Computer output monitors are used to continuously monitor the pressure drops on these 3 baghouses. ZFS Ithaca provided me with daily records for the months of August 2021 and February 2022, as requested. Readings are taken twice daily, although not required, once during the night shift and once during the day shift. Records indicate compliance with the pressure drop for the main exhaust filter and Jet Dryer A & B exhaust filters.

Table 4. EUPREP processes

Process	Control Device	VE (observed)	Operating Range	Observed Range
Whole Bean Cleaning and aspiration	Cyclone and main exhaust fabric filter (SVPREP)	None	0.5" – 10" H_2O Main Filter	3.55
Vertical seed conditioners (VSCA & VSCB)	Cyclones	None	VE only	NA
Jet Dryers (A & B)	Fabric filters for each, exhausts through SVPREP	A: None B: None	0.5" – 10" H_2O	A: 5.00 B: 1.68* *Note new bags were installed for Jet Dryer B in April 2022
Crown Cascade Dryers (CCDA & CCDB)	Cyclone and main exhaust fabric filter (SVPREP)	None	0.5" – 10" H_2O Main filter	3.55
Crown Cascade Coolers (CCCA & CCCB)	Cyclone and main exhaust fabric filter (SVPREP)	None	0.5" – 10" H_2O	3.55

			Main filter	
Hull screener and secondary aspirator	Cyclone and main exhaust fabric filter (SVPREP)	None	0.5" – 10" H_2O Main filter	3.55
Flaker Vacuum exhaust fan	Cyclone	None	VE only	NA

EUHULLGRINDING

This emission unit consists of 2 hammermills used to grind soybean hulls and is controlled by a baghouse. Exhaust gases emit through SVHULLGRINDING. This unit was operating during the inspection.

There are currently no Material Limits for EUHULLGRINDING.

Emission Limits & Testing/Sampling

EUHULLGRINDING has PM, PM10, PM2.5, and visible emissions limits. Testing is required to be conducted upon request of the AQD. At this time it is my professional judgement that EUHULLGRINDING does not need to be tested for PM emissions; a spot-check of the exhaust stack during the inspection indicated that there was no opacity being emitted from SVHULLGRINDING, and therefore ZFS Ithaca appears to be in compliance with the 5% opacity limit.

Process/Operational Restrictions, Design/Equipment Parameters & Monitoring/Recordkeeping

A Malfunction Abatement Plan (MAP) used to identify normal operating ranges of air cleaning devices, required maintenance, etc, is required to be submitted prior to startup of EUHULLGRINDING. The initial MAP was received via email January 14, 2020. ZFS Ithaca submitted an updated MAP via email (February 8, 2021 revision) received by AQD February 17, 2021. The MAP was reviewed and approved.

The MAP contains all emission units that require a MAP including EUHULLGRINDING. Operating ranges for EUHULLGRINDING's baghouse is included in the MAP and was used to determine compliance with this requirement to ensure equipment is operating properly.

The baghouse controlling both hammermills is required to be installed, maintained, and operated in a satisfactory manner, which includes operating the baghouses (with fabric filters) within the range specified in the MAP (0.5 – 10" H2O). During the inspection, I recorded a pressure drop of 5.44 " H2O, within the MAP-specified operating range.

ZFS Ithaca is required to monitor the pressure drop continuously and to record the pressure drop on a daily basis for the EUHULLGRINDING fabric filter. Computer output monitors are used to continuously monitor the pressure drop on this baghouse. ZFS Ithaca provided me with daily records for the month of August 2021 and February 2022, as requested, and demonstrated that they take readings twice daily, although not required, once during the night shift and once during the day shift. I reviewed these records and it appears that all pressure drops fall within the MAP-established operating range of 0.5 – 10" H2O. See attached for these records.

Non-certified VE's are required to be conducted and results recorded on a weekly basis. ZFS Ithaca provided me with weekly uncertified VE readings for the month of August 2021. Records indicate compliance with the 5% opacity limit. See attached for records.

EUPELLETIZING

EUPELLETIZING includes the hull pelletizing system and its pellet cooler. This unit was operating during the inspection.

There are currently no Material Limits for EUPELLETIZING.

Emission Limits, Testing/Sampling & Monitoring/Recordkeeping

EUPELLETIZING has PM, PM10, PM2.5, and visible emissions (VE) limits. Initial testing on EUPELLETIZING was conducted July 28 – 30, 2020. The test report was received October 8, 2020 and results indicated non-compliance for PM10 and PM2.5 (1.0 lb/hr, exceeding the 0.80 lb/hr limit). EUPELLETIZING was retested on November 10, 2020 and results indicated compliance with the PM10 and PM2.5 0.80 lb/hr limit at 0.058 lb/hr.

VE's are limited to 15% opacity over a 6-minute average. During the July inspection/stack test I did a spot-check of the VE's from SVPELLETIZING and did not observe any opacity emitting from the stack at that time. During this inspection there were no visible emissions present.

Non-certified VE observations are required to be conducted and results recorded on a weekly basis. ZFS Ithaca provided me weekly uncertified VE readings for the month of August 2021. See attached for these records. Records indicate compliance with the 15% limit.

With the issuance of PTI 20-17D, ZFS Ithaca is required to test for PM, PM10 and PM 2.5 within 60 days of achieving maximum production rate through the permitted equipment. ZFS Ithaca plans to achieve maximum production rate in April 2023 if all equipment needed to make the production upgrades is received in a timely manner.

Process/Operational Restrictions, Design/Equipment Parameters & Monitoring/Recordkeeping

A Malfunction Abatement Plan (MAP) used to identify normal operating ranges of air cleaning devices, required maintenance, etc, is required to be submitted prior to startup of EUPELLETIZING. The initial MAP was received via email January 14, 2020. ZFS Ithaca submitted an updated MAP via email (February 8, 2021 revision) received by AQD February 17, 2021. The MAP was reviewed and approved.

The cyclone controlling emissions from the pelletizing system is required to be installed, maintained, and operated in a satisfactory manner. ZFS Ithaca's MAP specifies that any opacity over the limit of 15% would be an indicator that the cyclone is not operating properly. Because there were no visible emissions seen being emitted from SVPELLETIZING, the cyclone appears to be maintained and operated in a satisfactory manner.

N. Donahey mentioned during the inspection that they would typically not expect to see any particulate being emitted from this stack, but only steam.

EUMEALGRINDING

EUMEALGRINDING is associated with 3 hammermills used to grind meal. This unit was operating during the inspection.

There are currently no Material Limits for EUMEALGRINDING.

Emission Limits, Testing/Sampling, & Monitoring/Recordkeeping

EUMEALGRINDING has PM, PM10, PM2.5, and visible emissions limits. Initial testing on EUMEALGRINDING for PM, PM10, PM2.5 and VE's was conducted during the July 28 – 30, 2020 testing series. The test report was received October 8, 2020 and results indicated compliance with all limits.

VE's are limited to 5% opacity over a 6-minute average. During this inspection I did not see any opacity emitting from SVMEALGRINDING. Non-certified VE's are required to be conducted and results recorded on a weekly basis. ZFS Ithaca provided me weekly uncertified VE readings for the month of August 2021, see attached. Records indicate compliance with the 5% opacity limit.

Process/Operational Restrictions, Design/Equipment Parameters, & Monitoring/Recordkeeping

A Malfunction Abatement Plan (MAP) used to identify normal operating ranges of air cleaning devices, required maintenance, etc, is required to be submitted prior to startup of EUMEALGRINDING. The initial MAP was received via email January 14, 2020. ZFS Ithaca submitted an updated MAP via email (February 8, 2021 revision) received by AQD February 17, 2021. The MAP was reviewed and approved.

The baghouse controlling the 3 hammermills is required to be installed, maintained, and operated in a satisfactory manner. Satisfactory operation includes maintaining the pressure drop at the baghouse within the range specified in the MAP (0.5 – 10" H2O).

During the inspection I recorded a pressure drop of 5.69 " H2O, within the operating range specified in the MAP. ZFS Ithaca is required to monitor the pressure drop continuously and to record the pressure drop on a daily basis for the EUMEALGRINDING fabric filter. Computer output monitors are used to continuously monitor the pressure drop on this baghouse. ZFS Ithaca provided me with daily records for the months of August 2021 and February 2022, as requested, and demonstrated that they take readings twice daily, although not required, once during the night shift and once during the day shift. I reviewed these records and it appears that all pressure drops fall within the MAP-established operating range of 0.5 – 10" H2O. See attached for these records.

EUCOOLINGTWR

This emission unit is a 3-cell mechanical draft cooling tower for utilities purposes.

There are currently no Emission Limits, Material Limits, Process/Operational Restrictions, or Reporting requirements for EUCOOLINGTWR.

Design/Equipment Parameters, Testing/Sampling, & Monitoring/Recordkeeping

EUCOOLINGTWR is required to be equipped and maintained with mist/drift eliminators with a vendor-certified maximum drift rate of 0.005% or less and ZFS Ithaca is required to maintain a record of the vendor's certification for the life of EUCOOLINGTWR. ZFS Ithaca provided an email from RBE Incorporated (Michigan-based cooling tower manufacturer) certifying that the cooling tower mist/drift eliminators meet the 0.005% maximum drift rate.

ZFS Ithaca is also required to maintain a record of any maintenance conducted on EUCOOLINGTWR. I requested records from July 2020 through June 2022. K. James, EHS Manager, a stated, "No maintenance has been conducted on the cooling towers from July 2020 – June 2022."

FGHANDLING

This flexible group includes EUSHIPRECEIVE (grain shipping and receiving operations), EUHANDLING (grain handling), and EUBINS (grain storage). Grain loading, unloading, and handling under this flexible group are subject to the NSPS Subpart DD, as ZFS Ithaca is classified as a terminal grain elevator.

EUBINS is comprised of 2 concrete bins (for dry grain) and 4 steel bins (2 of which store wet grain that feed the grain dryer (EUDRYING1).

Grain receiving (unloading grain via truck and railcar) is controlled by a baghouse that exhausts through SVSHIPRECEIVE. ZFS Ithaca currently does not operate truck and rail grain shipping (loading); however, if and when they do, the grain shipping operations would be controlled by the same baghouse as the grain receiving operations and emitted through SVSHIPRECEIVE as well. Once ZFS Ithaca begins grain loading via truck and rail, they will be required to test visible emissions from truck or rail loading (or both, if both have been used), as required by the NSPS Subpart DD.

Air ducts are present just beneath the grain pits which pulls air to the baghouse for control of particulate from grain received.

Oil spray is used on the grain to control grain dust as it is being moved through the grain handling equipment.

The loading and unloading bays are housed within a 4-bay building. Pit 4 (westernmost pit) and Pit 1 (easternmost pit) are capable of receiving wet or dry grain. "Wet" grain is a relative term for the moisture content of the grain. ZFS Ithaca considers soybeans with a moisture content of 13.5% or higher "dry." A moisture content below 13.5% would be considered "wet."

Pit 4 allows for unloading from both rail and truck, whereas Pit 1 only allows for truck unloading. Pit 3 is available for loadout activities, however, they have not been loading out any grain.

B. LaRosa said that truck unloading generally takes 5-10 minutes per truck.

EUSHIPRECEIVE, EUHANDLING, and EUBINS were not operating during the inspection (i.e. no truck or rail unloading was occurring).

Emission Limits & Testing/Sampling

FGHANDLING has PM and visible emission limits for SVSHIPRECEIVE, truck and railcar unloading, railcar and truck loading, and grain handling. ZFS Ithaca is required to conduct PM emissions testing per state rule and Method 9 visible emissions testing, as required by the NSPS Subpart DD. Testing of SVSHIPRECEIVE, truck unloading, and grain handling took place June 9, 2020. The receiving rate during the stack test was established at 602.7 tons per hour or 1,205,482.3 lbs/hr (maximum receiving rate). Pit 1 and Pit 4 each have their own leg rated at 20,000 bushels per hour, which equates to a capacity of 1.2 millon lbs/hr per leg and 2.4 million lbs grain/hr for both.

EUSHIPRECEIVE railcar unloading VE testing was completed November 11, 2020. Testing results indicated compliance with the 5% 6-minute average opacity limit.

During the June stack test it was noted that trucks unloading with hoppers produce less opacity than those that have to dump the grain to unload.

Table 5 contains the FGHANDLING test results, as reported in the test report. The test report states that there were no visible emissions seen during the testing of EUSHIPRECEIVE's truck unloading, grain handling, and SVSHIPRECEIVE stack emissions. As reported in the Stack Test Observation report, I noted that there were times when I could see opacity from the SVSHIPRECEIVE stack as well as fugitive emissions from truck unloading (albeit less than 5%). I brought the SVSHIPRECEIVE visible emissions to the attention of Montrose certified reader, Benjamin Durham, who stated that he did not see any visible emissions from the stack. Despite this discrepancy in our observations and based on the data I recorded, I believe ZFS Ithaca still met their opacity limit of 0% for SVSHIPRECEIVE and 5% for truck unloading. Regardless of these test results, a violation may exist if, at any time, the AQD conducts a 6-minute opacity reading on the stack, truck unloading, or any other equipment with an opacity limit, and find that the average is over the permitted limit.

On October 8, 2020, AQD approved ZFS Ithaca's request to waive the requirement for NSPS Subpart DD visible emissions testing on several of the conveyors with the exception of 1 conveyor, DC23. See the waiver discussion below:

Approved Performance Test Waiver based on Test Results of conveyors DC5 and DC6

DC5 and DC6 were evaluated per Method 9 at 3 1-hour test runs. The hard copy test report received 9/4/20 indicates that these two conveyors were in compliance with the 0% NSPS Subpart DD opacity requirement. It is my professional judgment that the following conveyors will be in compliance with this standard based on the following:

BC1: ZFS Ithaca has demonstrated that this conveyor is similar to DC5 and DC6 (same flow rate at 20,000 bushels/hr, type, covered), but with a larger cross-sectional area.

DC7, DC15-22, DC24-26: ZFS Ithaca has demonstrated that these conveyors are identical in type, flow rate and cross-sectional area (only vary in length) as DC5 and DC6.

DC11-14: These 4 conveyors are the same type as DC5 and DC6, covered, and have ½ the flow rate (10,000 bu/hr) and ½ the area (399.24 in2) of DC5 and DC6. Although not identical, the flow rate and area are proportionate to DC5 and DC6 flow rate and area and can be considered the same for the purposes of testing.

Approved Performance Test Waiver based on Test Results of conveyor BE01

BE01 was evaluated per Method 9 at 3-1-hour test runs. The hard copy test report indicates that this conveyor was in compliance with the 0% NSPS Subpart DD opacity requirement. It is my professional judgment that the following conveyors will be in compliance with this standard based on the following:

BE04, BE07: ZFS Ithaca has demonstrated that these two conveyors are the same as BE01 in type, dimensions, covered, and flow rate. The length varies, but for testing purposes are considered identical.

Approved Performance Test Waiver for Underground conveyors

DC2, DC3, and DC4 are underground grain conveyors, and as such there is no potential for opacity in ambient air from these units. As such, the waiver to not test these conveyors due to their underground location is approved.

Unapproved Waiver for Conveyor DC23

DC23 has a flow rate of 40,000 bu/hr. Conveyors with a similar flow rate to DC23 were not tested during the June 2020 testing event. ZFS has clarified that this conveyor was installed for use in selling and loading out soybeans in the event the production facility was not operating. The production facility is operating at this time and therefore ZFS is not actively selling and loading out soybeans. The equipment is used once per year for 15-30 minutes to ensure the conveyor can still be operated (maintenance loadout). The last time loadout occurred was January 2020.

ZFS Ithaca requested that the opacity testing requirement for DC23 be waived. Testing on DC23 shall not be waived; however, the AQD recognizes that testing cannot be performed until such a time that ZFS Ithaca is in a position to sell and loadout soybeans. While the waiver to test is denied, AQD approves of postponement of testing on DC23 until facility operations can accommodate loadout using this conveyor. AQD requires that ZFS Ithaca provide notification in the event that they begin to move operations toward loadout and sale of soybeans so that testing of this conveyor can ensue.

Table 5. June 2020 FGHANDLING Stack Test Data

Pollutant	Emission Limit	June 2020 Test Results	Compliance Status

SVSHIPRECEIVE PM (lb/1000 lb exhaust gas)	**0.10**	**0.0008**	**Compliance**
SVSHIPRECEIVE PM (gr/dscf)	**0.01**	**0.0004**	**Compliance**
SVSHIPRECEIVE Visible emissions (6-minute average)	**0%**	**0%**	**Compliance**
Truck unloading visible emissions (6-minute average)	**5%**	**0%**	**Compliance**
Grain handling visible emissions (6-minute average)	**0%**	**0%**	**Compliance**

Material Limits & Monitoring/Recordkeeping

EUSHIPRECEIVE is limited to 54,000,000 bushels of grain received per 12-month rolling time period as determined at the end of each calendar month, and 20,000,000 bushels of grain shipped via EUSHIPRECEIVE per 12-month rolling time period as determined at the end of each calendar month. ZFS Ithaca is required to track the amount of grain shipped and received. *Note that the limit prior to June 1, 2022 (issuance of PTI 20-17D) was 48,000,000 bushels/year grain received through EUSHIPRECEIVE (truck and rail unloading) and 48,000,000 bushels/year grain shipped through EUSHIPRECEIVE (truck and rail loading).

Monthly and 12-month rolling records from July 2020 – June 2022 were provided, see attached. The 12-month period with the highest quantity of soybeans received was April 2020 - March 2021 at 40,275,364 bushels, which is in compliance with the PTI 20-17C Material Limit of 48,000 bushels grain per 12-month period.(Compliance was determined based on the 20-17C PTI because that was the PTI in effect through issuance of PTI 20-17D in June 2022. No soybeans were shipped during this time period.

Process/Operational Restrictions

A Malfunction Abatement Plan (MAP) used to identify normal operating ranges of air cleaning devices, required maintenance, etc, is required to be submitted prior to startup of FGHANDLING. The initial MAP was received via email January 14, 2020. ZFS Ithaca submitted an updated MAP via email (February 8, 2021 revision), received February 17, 2021. The MAP was reviewed and approved.

The MAP identifies an operating range of 0.5 – 8 inches water column as acceptable for operation of the EUSHIPRECEIVE baghouse. This equipment was not operating during the inspection to confirm proper operation of the baghouse.

The MAP also identifies an oil application system to control particulate matter from EUHANDLING, with an application rate of 0.5 – 2.0 gallons per 1,000 bushel of grain.

Design/Equipment Parameters & Monitoring/Recordkeeping

The baghouse controlling the fugitive emissions from grain receiving is required to be installed, maintained, and operated in a satisfactory manner. This includes operating the baghouses (with fabric filters) within the ranges specified in the MAP (0.5 – 10" H2O).

ZFS Ithaca is required to monitor the pressure drop continuously and to record the pressure drop on a daily basis for the SVSHIPRECEIVE fabric filter. ZFS Ithaca provided me with daily records for the months of August 2021 and February 2022. ZFS Ithaca takes readings twice daily when the equipment is operating. I reviewed these records and noted that all recorded pressure drops were within the proper operating range, except for the reading taken on 2/27/22 at 0.04" w.c. ZFS Ithaca noted that on this date (Sunday) they were not receiving any product and therefore the equipment was not operating. Therefore, a reading had been taken while the equipment was not operating and this data point can be dismissed.

ZFS Ithaca specifies an operating range on their pressure drop recordkeeping form for this unit (0.5 – 8" w.c.), which differs from their MAP range of 0.5 – 10" w.c.

The grain handling operations (EUHANDLING) are required to have an oil application system that is installed and operated in a satisfactory manner to minimize airborne particulate from the grain. The oil that is used is refined soybean oil from the Zeeland, MI plant. Grain receiving was not operating during the inspection and therefore confirmation onsite that the oil application system was operating properly did not occur. ZFS Ithaca staff showed me the previous day's oil application rate at 1.5 gallons per 1000 bushels (dividing the total quantity of beans received via rail and truck by the amount of oil that was used). ZFS Ithaca staff said that the oil tank level is read every night and subtracted from the previous night's level to get total quantity of oil used for the day. In the event that the oil system malfunctions, the conveyors from the pits will stop and receipt of grain ceases. The HMI screen will have a blue or red indicator when the oil system malfunctions, and an audible alarm will sound. The oil applicators turn on automatically when the conveyors turn on (grain is detected via amperage).

FGLOADSTORE

FGLOADSTORE consists of emission units used to store (EUHULLSTORAGE) and loadout (EUHULLLOADOUT) soybean hulls, loadout of meal (EULOADOUT) and ingredient receiving and storage (EUINGREDIENTS). Baghouses are used to control each of these emission units. B. Rillema said they are not receiving or storing ingredients yet (i.e., EUINGREDIENTS has not and is currently not operating).

EUINGREDIENTS was installed and trial-operated on June 15, 2020; since that time, ZFS Ithaca has not conducted loadout operations of ingredients. Stack testing will be required once ZFS Ithaca begins conducting loadout operations for this emission unit.

EULOADOUT was operating during the inspection. EULOADOUT and EUHULLLOADOUT operations (loading out of meal and hulls, respectively) are conducted in the same 1-bay building that has the capability to have both doors closed while loading out trucks. Most times both doors are closed during the loading; however, during times when convenience is necessary due to a line-up of trucks, the front door will be shut and the rear door will remain open to allow trucks to enter the loading bay faster.

Emission Limits & Testing/Sampling

EULOADOUT and EUINGREDIENTS have emission limits for PM, PM10, PM2.5, and visible emissions (VE). Testing is required to be conducted within 180 days after commencement of initial startup. Initial startup for EULOADOUT was February 17, 2020. EUINGREDIENTS has not yet commenced initial startup and will require testing within 180 days of initial startup.

EULOADOUT testing for PM, PM10, PM2.5 and VE's was conducted during the testing series that occurred July 28 – 30, 2020. The test report was received October 8, 2020 and indicates compliance with EULOADOUT PM, PM10, PM2.5 and VE limits.

Fugitive emission VE's from the emission units in FGLOADSTORE are limited to 10% opacity over a 6-minute average. During the inspection EULOADOUT was being operated. A two-trailer truck was being loaded. Both bay doors were open. I saw no signs of fugitive dust/visible emissions present from the north side bay door, nor the south side bay door while loading was in process.

Process/Operational Restrictions

A Malfunction Abatement Plan (MAP) used to identify normal operating ranges of air cleaning devices, required maintenance, etc, is required to be submitted prior to startup of FGLOADSTORE emission units. The initial MAP was received via email January 14, 2020. ZFS Ithaca submitted an updated MAP via email (February 8, 2021 revision), received February 17, 2021. The MAP was reviewed and approved. Operating ranges for various control devices are included in the MAP and were used to ensure equipment is operating properly.

Design/Equipment Parameters & Monitoring/Recordkeeping

Each emission unit has its own control device. EUHULLSTORAGE has 4 baghouses, one baghouse for each storage bin. EUHULLLOADOUT has 2 baghouses, 1 baghouse for each overhead loadout bin. EULOADOUT has one baghouse used to loadout meal. All baghouses are required to be installed, maintained, and operated in a satisfactory manner. This includes operating the EUHULLSTORAGE and EUHULLLOADOUT baghouses at greater than 0" H2O, and EULOADOUT at 0.2 – 8" H2O.

B. LaRosa and I discussed why hull storage and hull loadout pressure drops only need to be greater than 0 to ensure proper operation: Initially, ZFS Ithaca had established a range of 0.2 – 5" H2O; however, after operating the equipment for some time, ZFS Ithaca staff learned that because the hulls are very light, little to no pressure drop is typically generated at the dust collector. Thus, any pressure drop above 0 is an acceptable pressure drop. AQD agrees with this rationale and finds the pressure drop range of greater than 0" H2O acceptable.

Table 6 provides pressure drop data recorded during the inspection.

Table 6. **FGLOADSTORE baghouse pressure drop data.**

Emission Unit	Baghouse 1 (" H2O)	Baghouse 2 (" H2O)	Baghouse 3 (" H2O)	Baghouse 4 (" H2O)	Operating Range (per MAP)	Comments
EUHULLSTORAGE	(FLT-50225) Not Operating	(FLT-50235) 0.88	(FLT-50245) Not operating	(FLT-40255) Not operating	>0" H2O	Only one baghouse runs at a time because ZFS Ithaca only loads from one silo at a time.

EUHULLLOADOUT	(FLT-50415) 0.94	(FLT-50425) Not Operating	NA	NA	>0" H2O	Only 1 baghouse can be operated at a time
EULOADOUT	1.53	NA	NA	NA	0.2 – 5" H2O	NA

The MAP establishes 0% opacity as an indicator of proper baghouse operation from EUHULLSTORAGE and EUHULLLOADOUT. During the inspection I noted no opacity emitting from the EUHULLSTORAGE or EUHULLLOADOUT stacks.

ZFS Ithaca is required to monitor the pressure drop continuously and to record the pressure drop on a daily basis for each baghouse in FGLOADSTORE. Computer output monitors and pressure drop gauges are used to continuously monitor the pressure drop on these baghouses. ZFS Ithaca provided me with daily records for the months of August 2021 and February 2022, as requested. They record pressure drops for these emission units twice per day when operating. All records indicate compliance with the pressure drop ranges as established by the MAP for EULOADOUT, EUHULLSTORAGE, and EUHULLLOADOUT.

Non-certified VE's of fugitive dust emissions are required to be conducted and recorded on a weekly basis for loading and unloading activities (single-bay building loading and unloading activities). ZFS Ithaca provided me weekly uncertified VE readings for the month of August 2021. See attached records. Records indicate compliance with the fugitive emissions 10% limit, at 0% opacity for all readings.

FGEXTRACTION

FGEXTRACTION processes are subject to the NESHAP Subpart GGGG for Solvent Extraction for Vegetable Oil Production. This flexible group consists of emission units used to store the extraction solvent, hexane (EUTANKS1-3); the soybean oil extraction process; the mineral oil adsorption system (MOS) used to control the hexane emissions from the extraction process and tanks (EUEXTRACTION); 3 meal dryers and 1 meal cooler (EUDC) and storage of crude soybean meal (EUMEALSTORAGE). The MOS recovers hexane gas from the soybean oil/solvent distillation unit, as well as the wastewater reboiler stream. Solvent in the distiller can come from the extractor and desolventizer toaster. Any hexane not removed from the meal in the desolventizer toaster is sent to EUDC where residual hexane is discharged to ambient air.

EUEXTRACTION and EUDC were operating during the inspection.

<u>Emission Limits, Testing/Sampling & Monitoring/Recordkeeping</u>

EUEXTRACTION and EUDC have VOC emission limits (lb/hr and tpy). Additionally, EUDC has PM, PM10, PM2.5 and visible emissions limits. ZFS Ithaca is required to conduct VOC and PM emissions testing. Initial testing occurred on July 29, 2020. The test report was received October 8, 2020 and the results indicated compliance with EUEXTRACTION VOC limits and EUDC VOC, PM, PM10, and PM2.5 limits (VE's are not required to be tested).

On a 12-month rolling basis (as determined at the end of each calendar month), VOC's are limited to 62.63 tpy for EUEXTRACTION and 132.5 tpy for EUDC. ZFS Ithaca is required to keep monthly and 12-month rolling VOC emission calculation records for these two emission units. The VOC emissions calculations are to be based on the most recent stack test data. The July 2020 test results indicate a EUEXTRACTION VOC emission rate of 0.30 lb/hr and a EUDC VOC emission rate of 12.49 lb/hr. ZFS Ithaca provided monthly and 12-month rolling VOC

emissions data for both EUEXTRACTION and EUDC for August 2020 – June 2022. VOC calculations were based on the emission factors determined during the 2020 stack test.

The highest 12-month VOC emissions from EUEXTRACTION was 1.27 tons, predominantly occurring in calendar year 2021. The highest 12-month VOC emissions from EUDC was 53.1 tons for the 12-month periods ending in January and February 2021 (see attached records).

During the inspection I noted that there was 0% opacity emitting from EUDC's stack, SVDC.

ZFS Ithaca appears to be meeting their Emission Limits at this time.

Material Limits & Monitoring Recordkeeping

ZFS Ithaca was limited to 3,800 tons of soybeans processed per calendar day in FGEXTRACTION under PTI 20-17C; under current PTI 20-17D the soybeans processed per day is limited to 4,300 tons. Tons of soybeans processed should be determined as measured at EUPREP. Daily records are required to be kept. ZFS Ithaca provided the daily records from June 2020 – June 2022, as requested. Highest daily soybean throughput between June 2020 and May 31, 2022 (covered under PTI 20-17C limit of 3,800 tons per day) was 3,797 tons on October 30, 2021 and April 19, 2022. The highest daily soybean throughput between June 1 – 30 (covered under PTI 20-17D limit of 4,300 tons per day) was 4,049 tons on June 30, 2022.

ZFS Ithaca appears to be meeting the daily throughput limits under 20-17C and 20-17D.

The Material Limits include limits that only apply during the initial startup period, as defined in 40 CFR Part 63.2872:

"A period of time from the initial startup date of a new, reconstructed or modified source, for which you choose to operate the source under an initial startup period, until the date your source operated for 15 consecutive days at or above 90% of the nominal design rate of the extractor or at or above 90% of the permitted production rate of your source. The initial startup period following initial startup of a new or reconstructed source may not exceed 6 calendar months."

ZFS Ithaca has completed their initial start-up period, however, the information below is contained in this report to document that the recordkeeping associated with his initial start-up period was conducted:

During the July inspection/stack test, B. Rillema defined ZFS Ithaca's initial startup period from the date of startup of EUDC and EUEXTRACTION (February 10, 2020) through June 4, 2020. There are several Material Limits within FGEXTRACTION for Total Extraction Solvent Loss; however, only one limit applies to the initial startup period: 1.0 gallon per ton of soybeans processed, on a 3-month rolling time period, as determined at the end of each calendar month. Monthly records were provided for February through June 2020 (3-month rolling calculations were not correctly calculated by ZFS Ithaca). Table 7 provides the monthly and 3-month rolling totals (3-month rolling were calculated by AQD, based on ZFS Ithaca's reported monthly totals), which are in compliance with the limit. Attached is the ZFS Ithaca data.

Table 7. Initial Startup Period Solvent Loss, 3-month rolling

Month	Monthly Gallons Solvent Loss Per Ton of Soybeans	3-month Rolling Gallons Solvent Loss per Ton of Soybeans
February 2020	0.19	0.19
March 2020	0.166	0.356

April 2020	**0.113**	**0.469**
May 2020	**0.099**	**0.378**
June 2020	**0.086**	**0.298**

The remaining Material Limits for Total Extraction Solvent Loss are as follows: 0.250 gal/ton of soybeans processed on a 3-month rolling period; 0.150 gal/ton soybeans processed per 12-month rolling period; and 0.2 gal/ton soybeans processed per 12-operating month rolling time period (only for "operating months" as defined in 40 CFR 63 Part 63.2872). Table 8 contains these limits as well as ZFS Ithaca's highest actual loss between August 2020 and June 2022 (see attached records for full data set).

Table 8. **Total Extraction Solvent Loss – Various Limits & Actuals**

Limit **(gallons/ton soybeans processed)**	**Time Period**	**Highest Actual Loss** **(gallons/ton soybeans processed)**
0.250	**3-month rolling**	**0.14**
0.150	**12-month rolling**	**0.121**
0.2	**12-month rolling** **(operating months only)**	**0.1**

ZFS Ithaca calculates the 3-month rolling and 12-month rolling gal solvent loss/ton soybeans processed by summing the quantity of solvent lost over the 3-month or 12-month period, summing the quantity of soybeans processed over that same 3-month period or 12-month period, and then dividing the two to get a rolling ratio.. I confirmed with AQD permit engineer, Michelle Rogers, that this method is correct for calculating the 3-month and 12-month rolling ratios.

The highest 3-month rolling total extraction solvent loss was 0.14 gallons per ton of soybeans processed from July – September 2020.

The highest total extraction loss gal/ton soybeans processed per 12-month rolling period and 12-operating month rolling period occurred during the period of December 2020-January 2021, was 0.121 gal/ton soybeans and 0.1 gal/ton soybeans, respectively, within the limits of the ROP. Currently the 12-month rolling and 12-operating month rolling values are the same because ZFS Ithaca has been conducting soybean oil extraction every calendar month since the initial startup period.

Process/Operational Restrictions, Design Equipment Parameters, & Monitoring/Recordkeeping

A Malfunction Abatement Plan (MAP) used to identify proper operation of the Mineral Oil Adsorption system (MOS) and the EUDC cyclone required maintenance, etc, is required to be submitted prior to startup of FGEXTRACTION emission units. The initial MAP was received via email January 14, 2020. ZFS Ithaca submitted an updated MAP via email (February 8, 2021 revision), received February 17, 2021. The MAP was reviewed and approved. Operating ranges for various control devices are included in the MAP and were used to ensure equipment is operating properly.

The MOS and EUDC cyclones are required to be installed and operating properly in accordance with the approved MAP. B. Rillema explained that % LEL and the sparge deck temperature operating values are used as an indicator for proper operation of the Mineral Oil Adsorption System. The sparge deck temperature is also used to ensure proper operation of the EUDC. Proper operation includes operating the sparge deck temperature at or above 195F and the %LEL less than 50%. These parameters were recorded during the inspection, see Table 9. ZFS Ithaca was operating the %LEL and sparge deck temperatures within the appropriate operating ranges.

I requested ZFS Ithaca provide me with the date, time, and measures taken to return the %LEL or sparge deck temperature back to the normal operating range for all cases where these variances existed. ZFS Ithaca provided me with a statement (attached) that there have been no variances that occurred after the initial start-up period.

The EUDC cyclones have a limit of 15% opacity and this limit is used to determine proper operation of the cyclones. Table 9 contains the opacity reading during the inspection. ZFS Ithaca is meeting this opacity limit.

ZFS Ithaca is required to record the desolventizer toaster sparge deck temperature hourly during operation, and the %LEL a minimum of 4 times per day. Sparge deck temperatures and % LEL records were provided for August 2021 and February 2022, as requested. Records indicate that the %LEL is recorded 6 times per day (3 readings taken during the day shift and 3 readings taken during the night shift) and the sparge deck temperature is recorded hourly. Records indicate compliance with the sparge deck temperatures and the %LEL.

Table 9. EUEXTRACTION & EUDC Operating Parameters recorded during Inspection

EUEXTRACTION	**Data recorded during 8/5/22 Inspection**
Mineral Oil Absorption System % LEL (0-50% - MAP)	**7.42**
Mineral Oil flow rate (gpm)	**28.23**
Sparge deck temperature (above 195F - MAP)	**225.9 °F**
EUDC	
Sparge Deck Temperature (above 195F)	**225.9 °F**
Snapshot Opacity Check – SVDC Cyclone Stack	**0%**
(15% limit)	

Additional Design/Equipment Parameters

Each hexane tank (EUTANK1, EUTANK2, and EUTANK3) is required to be equipped with a closed vent system that routes vapors back to the process and to the MOS control system. N. Donahey said These tanks do have closed vent systems. All hexane vapors are vented back to the work tank where a vent condenser condenses the vapors to liquid. Any uncondensed vapors will go to the MOS.

The desolventizer toaster sparge deck is required to be set up with a low temperature alarm. N. Donahey confirmed that both an audible and visual alarm will be triggered if a low temperature is detected (152 F at the top of the dome in DTDC).

The absorber system is required to be equipped with a device that measures changes in the vacuum across the system. N. Donahey confirmed that there is a vacuum pulled off the mineral oil absorber and that it is run on a VFD to maintain the vacuum pressure at 1.5" w.c. This pressure is monitored. He said that a positive pressure would increase the %LEL.

Additional Monitoring/Recordkeeping

ZFS is required to record the following:

-The volume fraction of HAP present at greater than 1% by volume and gallons of extraction solvent in each shipment;

-The monthly weighted average volume fraction of HAP in the extraction solvent received;

-And the monthly records of the actual extraction solvent loss in gallons.

There are no emission limits directly associated with these values, but rather these values are used to calculate emissions to determine compliance with the emission limits. ZFS has provided me with all records, attached for reference.

FGBOILERS

FGBOILERS includes 2 natural gas-fired boilers, each with a maximum heat input of 95 MMBtu/hr. I recorded each boiler's information from the boiler identification plate (see attached photos). Boiler plates confirm that the boilers are each rated at 95 MMBtu/hr max:

EUBOILER1: Johnston Boiler Co

Catalog No PFTS2500-3G200S

Unit #: 11378-01

Date: 2018

Max Gas Firing Rate: 95,000 MMBTU

EUBOILER2: Johnston Boiler Co

Catalog No PFTS2500-3G200S

Unit #: 11378-02

Date: 2018

Max Gas Firing Rate: 95,000 MMBTU

Emission Limits & Testing/Sampling

FGBOILERS has NOx and CO emissions limits. Testing is required to be conducted upon request of the AQD. At this time it is my professional judgement that FGBOILERS will not need to be tested because they are fairly new.

Material Limits

I verified with ZFS Ithaca staff while onsite during the July stack test/inspection, that these units only burn pipeline quality natural gas.

Process/Operational Restrictions

A Malfunction Abatement Plan (MAP) used to identify normal operating ranges of air cleaning devices, required maintenance, etc, is required to be submitted prior to startup of FGBOILERS. The initial MAP was received via email January 14, 2020. ZFS Ithaca submitted an updated MAP via email (February 8, 2021 revision), received February 17, 2021. The MAP was reviewed and approved.

Design/Equipment Parameters

A device to monitor and record the natural gas usage is required to be calibrated, maintained, and operated in a satisfactory manner. N. Donahey said that Dean Boiler conducts CSD 1 & 2 inspections which observe lb/hr rate to the steam the boiler is producing. If they find that the lb/hr rate to steam produced appears incorrect, calibrations will be conducted to determine the issue. Unsatisfactory operation of the boiler would be an indicator that a calibration is necessary; this is acceptable to the AQD.

Monitoring/Recordkeeping

Although there are no limits on quantity of natural gas burned, per the NSPS Subpart Dc, ZFS Ithaca is required to track natural gas usage for each boiler on a monthly basis. Monthly records from July 2021 – June 2022 were provided. See attached.

Reporting

ZFS Ithaca has submitted all reports required under the NSPS for notification of date of construction and actual startup.

FGBOILERMACT

This flexible group covers all Gas 1 Fuel subcategory requirements for new boilers/process heaters at major sources of HAP, subject to the MACT Subpart DDDDD. Compliance is required upon startup of the units, and applies to EUBOILER1 and EUBOILER2.

There are currently no Emission Limits, Design/Equipment Parameters, or Testing/Sampling requirements for FGBOILERMACT.

Material Limits

ZFS Ithaca shall only burn fuels as allowed in the "Unit signed to burn gas 1" subcategory. This includes natural gas-burning units. As stated under FGBOILERS, EUBOILER1 and EUBOILER2 burn natural gas only.

Process/Operational Restrictions, Monitoring/Recordkeeping & Reporting

EUBOILER1 and EUBOILER2 are new boilers with continuous oxygen trim and each with a heat input capacity of 10 MMBTU/hr or greater. There are no emission limits or work practice standards that ZFS needs to comply with

according to the NESHAP Subpart DDDDD. ZFS Ithaca is, however, required to conduct a tune-up of each boiler every 5 years (see condition IX.6.b). The last boiler tune-up was conducted in September 2020.

Compliance Statement: ZFS Ithaca appears to be in compliance with PTI 20-17D at this time, with the consideration that they will be submitting an application to modify the permit for EUDRYING1 burner ratings.



Image 1(EUSHIPRECEIVE) : Note "Pit 1" and "Pit 4" are the two active pits onsite. Not operating during inspection.



Image 2(Dust Control) : (Pit 4) Ventilation systems (vertical ducts) to pull dust from grain received from pit to the baghouse.

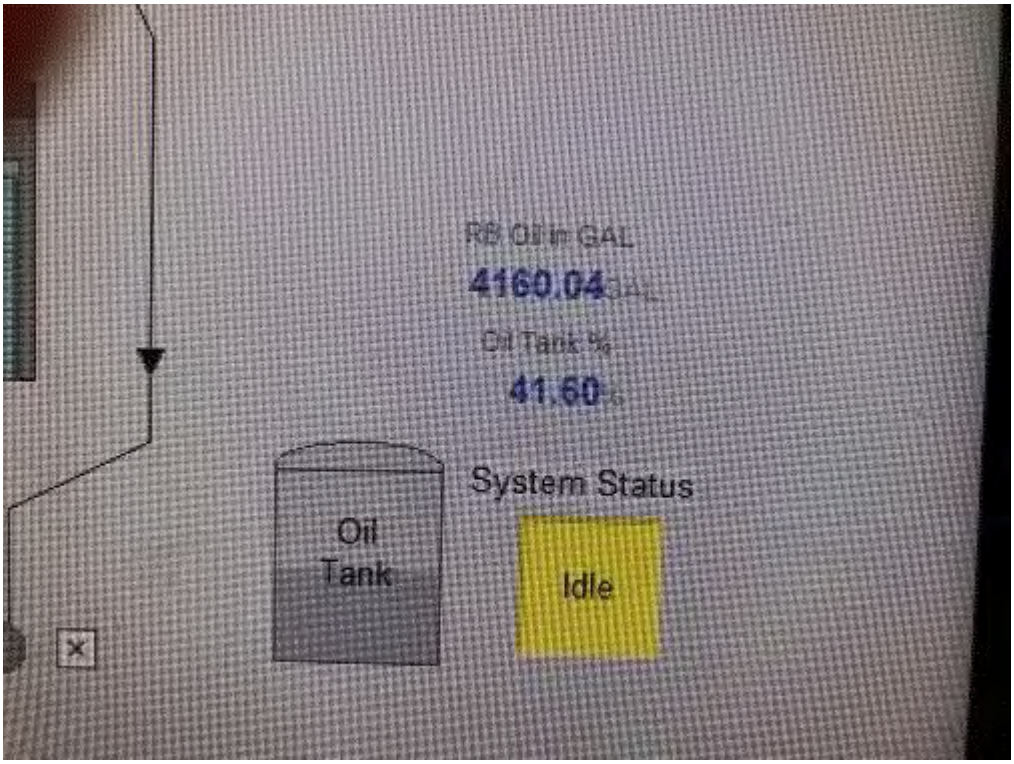

Image 3(Oil System) : FGHANDLING oil application system monitor



Image 4(Sweeper) : Sweeper used for paved roads onsite. Note collection system attached to broom mechanism.

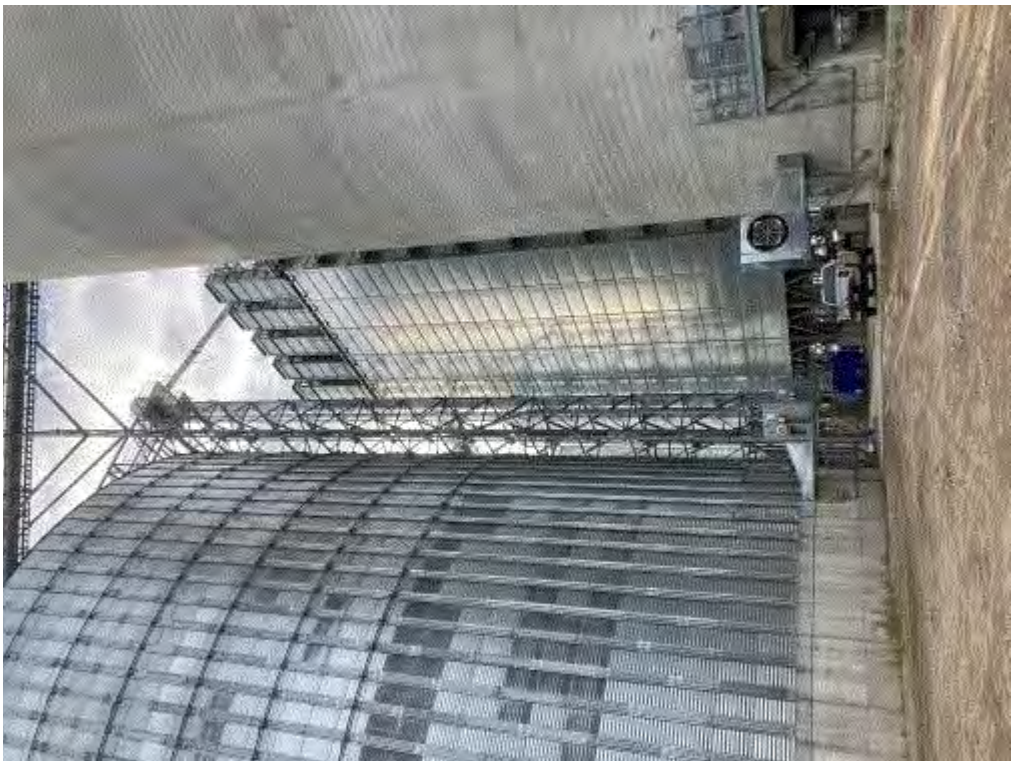

Image 5(EUDRYING1) : Middle structure with 5 stacks is the grain dryer.



Image 6(Stacks) : EUPELLETIZING stack (rightmost stack) and EUHULLGRINDING stack (leftmost stack)



Image 7(FGLOADSTORE) : FGLOADSTORE loadout pit

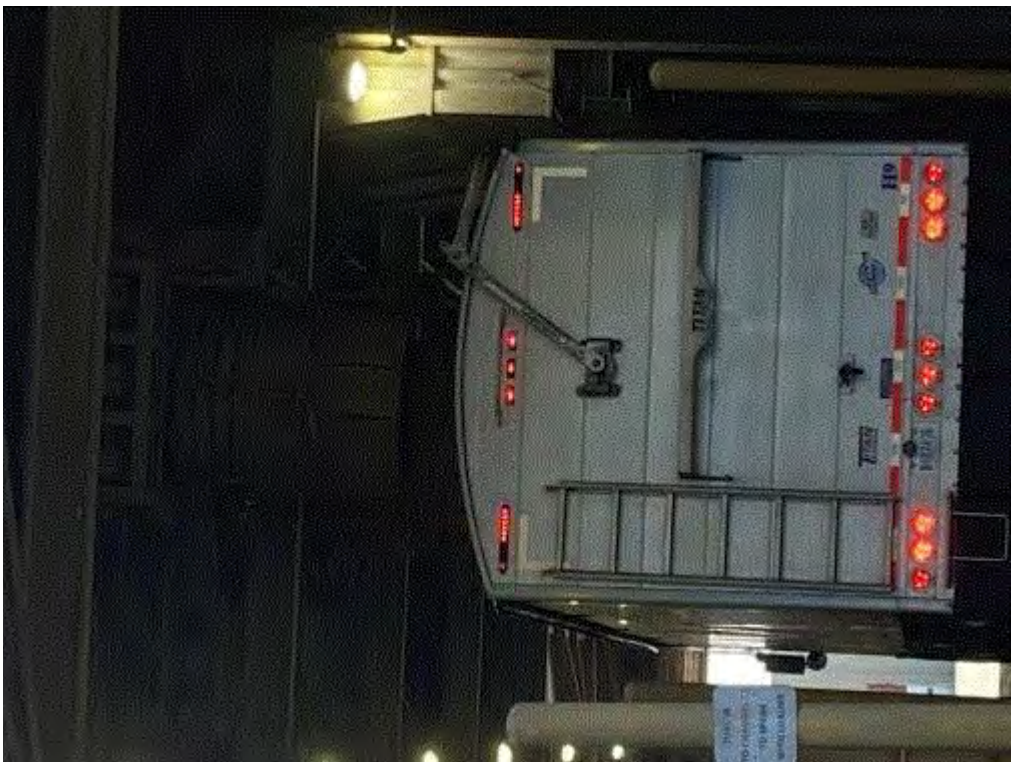

Image 8(Truck Loading) : FGLOADSTORE truck loading. No opacity emitted outside building.

NAME Michelle Luplow DATE 9/19/22 SUPERVISOR RB

Monthly and 12-month Rolling Records for Bushels of Grain Dried		
Month-Yr	**Soybeans Dried (Bushels)**	**12-Month Rolling Total**
Jul-2020	118,695	3,556,944
Aug-2020	110,150	3,667,094
Sep-2020	134,723	3,801,817
Oct-2020	697,762	4,064,156
Nov-2020	286,656	3,679,160
Dec-2020	166,515	3,165,127
Jan-2021	28,650	3,089,585
Feb-2021	0	3,050,617
Mar-2021	77,893	3,101,697
Apr-2021	0	2,603,262
May-2021	0	2,072,935
Jun-2021	0	1,621,044
Jul-2021	0	1,502,349
Aug-2021	0	1,392,199
Sep-2021	84,183	1,341,659
Oct-2021	619,378	1,263,275
Nov-2021	1,213,959	2,190,578
Dec-2021	184,963	2,209,026
Jan-2022	174,950	2,355,326
Feb-2022	147,300	2,502,626
Mar-2022	69,514	2,494,247
Apr-2022	47,250	2,541,497
May-2022	33,457	2,574,954
Jun-2022	48,014	2,622,968

EUDRYING1

Confirmation of the BTU/hr max rate on each burner

Attached is the documentation showing that each of the two burners that are part of EUDRYING1 are rated at 34 MMBTU/hr. During the permitting process, the vendor stated that the burners would each be rated at 33 MMBTU/hr, which is what the Permit states. Upon receiving the requested documentation, it was noticed that the burners are rated at 34 MMBTU/hr. ZFS Ithaca will submit a PTI Application to rectify this error.

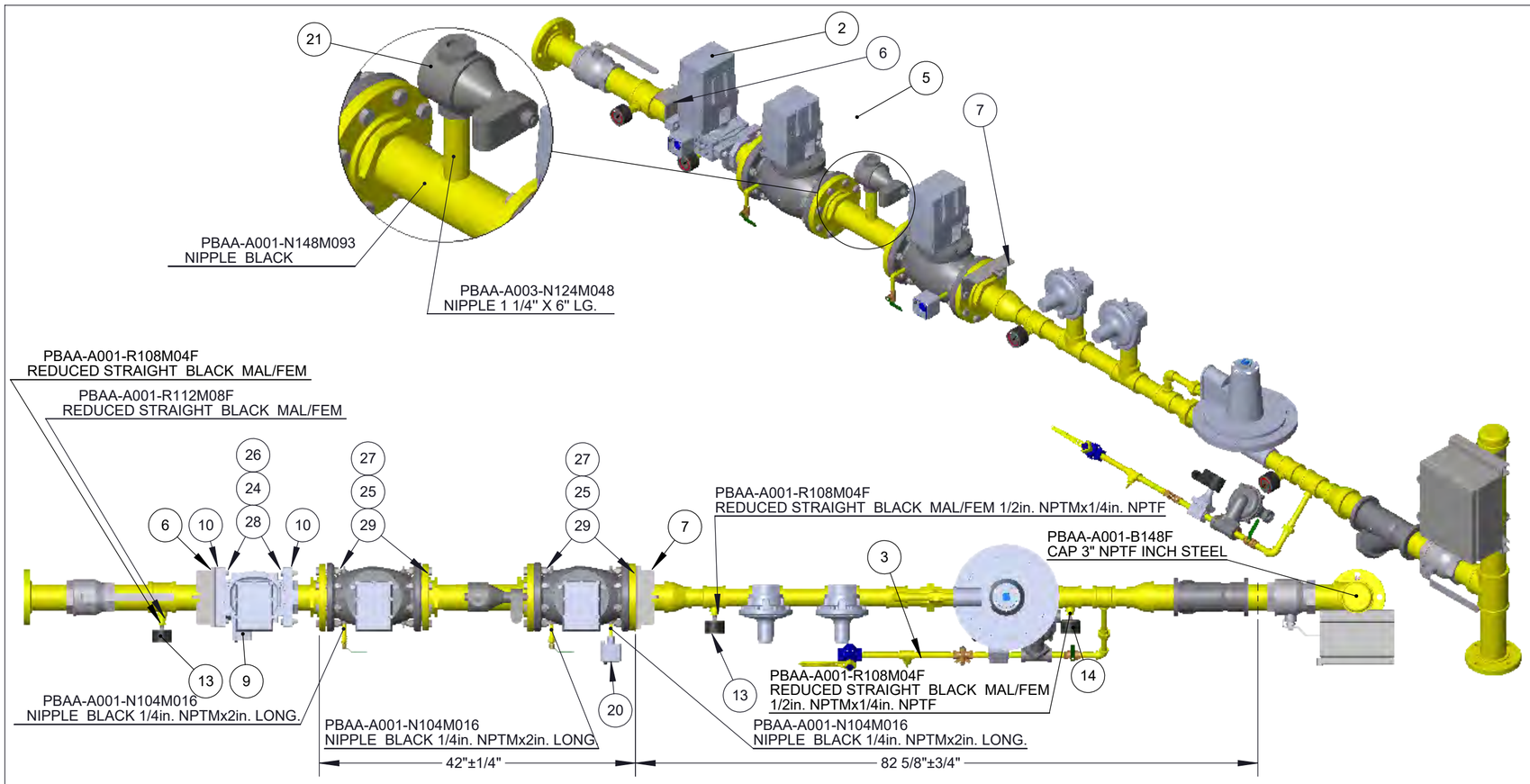

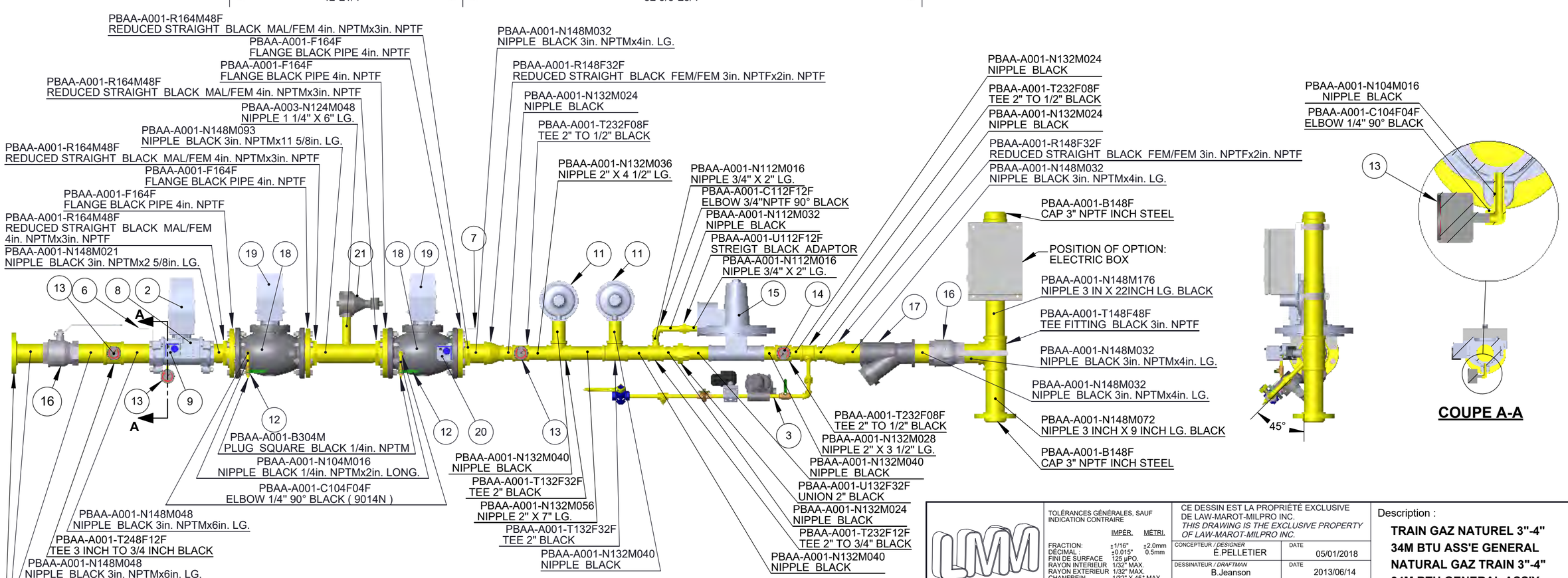

ITEM	PART NUMBER	DESCRIPTION	QTE
1	PBAA-A001-F148F	FLANGE BLACK PIPE 3in.NPTF	1
2	UCTG-A0004	MODULATING VALVE ASS'Y --	1
3	UCTG-A0020	ASSEMBLY PILOT LIGHT GAZ TRAIN	1
4	UCTG-A0022	NATURAL GAZ TRAIN SUPPORT 21 @30M BTU	1
5	SC3-A00647-04	VALVE PROTECTOR	1
6	SC3-P00900-01	PROTECTOR GUARD LEFT HIGH SEAT	1
7	SC3-P00900-02	PROTECTOR GUARD RIGHT HIGH SEAT	1
8	UCTG-P0002	BODY VALVE MODULATING NO: V5097B1010	1
9	UCTG-P0004-02	HIGH PRESSURE SWITCH GAZ (1.5x7 PSI) C6097B1044	1
10	UCTG-P0009	HONEYWELL 32001605-003 3 INCH -	2
11	UCTG-P0010-03	PRESSURE SAFETY VALVE 2in. PRESSURE AT 3.5 PSI	2
12	UCTG-P0014-04	VALVE MANUELLE JENKINS 201J-1/4NPTF	2
13	UCTG-P0021-02	MANOMETER 2 1/2in. 0x100 INCH.WC 1/4 CB BACK OUTLET	3
14	UCTG-P0022	MANOMETER 2 1/2in.+ GLYCERINE 0x30 PSI/KPA 1/4" NPT BACK	1
15	UCTG-P0076-01-01	REGULATOR FISHER 2in. 133H SPRING: 1.5 @ 3psig, 34000 SCFH	1
16	UCTG-P0133	BALL VALVE BRASS 3 in. NPT W/LOCKABLE LEVER	2
17	UCTG-P0134-24	Y-STRAINER 3" NPTF CAST IRON- 250 LB	1
18	UCTG-P0001-2	BODY VALVE ON-OFF 4" FLANGE WITH SWITCH INTEGRAL CLOSE	2
19	UCTG-P0006-2	ACTUATOR ON/OFF VALVE 4" WITH SWITCH INTEGRAL CLOSE	2
20	UCTG-P0005-02	LOW PRESSURE SWITCH GAZ (12@60in. WC) 1/4" NPT	1
21	UCTG-P0156-20-120	2-WAY GAS VENT VALVE, ASCO(5PSI) 8214G064, (NC), 1-1/4NPT, 120V	1
22	PBAA-A001-N148M093	NIPPLE BLACK 3in. NPTMx11 5/8in. LG.	1
23	PBAA-A003-N124M048	NIPPLE 1 1/4" X 6" LG.	1
24	WM-1008	LOCK WASHER Z.PL 1/2"	6
25	WM-1010	LOCK WASHER Z.PL 5/8in.	32
26	WG-0108-5100	HEX. NUT GR5 Z.PL 1/2"-13NC	6
27	WG-0110-5100	HEX. NUT GR5 Z.PL 5/8in.-11NC	32
28	WA-0108-5116	HEX. BOLT GR5 Z.PL 1/2in.-13NCx2in.	6
29	WA-0110-5124	HEX. BOLT GR5 Z.PL 5/8po.-11NCx3po.	32

Référence : --	Traiter : ASSEMBLAGE	Poids / *Weights* : 741.4 Lbs.

TOLÉRANCES GÉNÉRALES, SAUF INDICATION CONTRAIRE

	IMPÉR.	MÉTRI.
FRACTION:	±1/16"	±2.0mm
DÉCIMAL :	±0.015"	0.5mm
FINI DE SURFACE	125 µPO.	
RAYON INTERIEUR	1/32" MAX.	
RAYON EXTERIEUR	1/32" MAX.	
CHANFREIN	1/32" X 45° MAX.	
ANGULAIRE:	±1°	±1°

CE DESSIN EST LA PROPRIÉTÉ EXCLUSIVE DE LAW-MAROT-MILPRO INC.
THIS DRAWING IS THE EXCLUSIVE PROPERTY OF LAW-MAROT-MILPRO INC.

CONCEPTEUR / *DESIGNER*	É.PELLETIER
DATE	05/01/2018
DESSINATEUR / *DRAFTMAN*	B.Jeanson
DATE	2013/06/14
VERIFICATEUR / *CHECKER*	--
DATE	AA/MM/JJ

Description :

TRAIN GAZ NATUREL 3"-4"
34M BTU ASS'E GENERAL
NATURAL GAZ TRAIN 3"-4"
34M BTU GENERAL ASS'Y

1150, BROUILLETTE ST-HYACINTHE, QUÉ. CANADA
J2T 2G8, TEL.: 450-771-6262, FAX.: 450-771-6264
Courriel : info@law-marot-milpro.com

ÉCHELLE: *SCALE :*	FORMAT	DESSIN NO / *DRAWING NO :*	FEUILLE *SHEET*	Rev
1:14	C	**UCTG-A0016-01**	3/3	**1**

ITEM	NO DE PIECE	Code Fournisseur	DESCRIPTION	QTE
1	UCTG-P0014-08	201J-1/2	VALVE MANUELLE JENKINS 201J-1/2NPTF	1
2	UCTG-P0017	13445	PRESSION CONNECTOR TEST 1/8in.NPTM	1
3	UCTG-P0019	10027231	1/2" NPT ADJ. ORIFICE "GAS COCK" VALVE, 1 psig RATING	1
4	UCTG-P0020	12.601HOMESREAD	VALVE 1/2in. (200M-1/2in.)	1
5	UCTG-P0025	FWRENCH	HANDLE MANUAL VALVE 1/2in. (G)	1
6	UCTG-P0142	111012111	REGULATEUR DU PILOT SIZE 1/2" NT -	1
7	UCTG-P0153-08-120		GAS SHUTOFF VALVE, ASCO S261 2/2, (NC), 1/2NPT, 120V	1

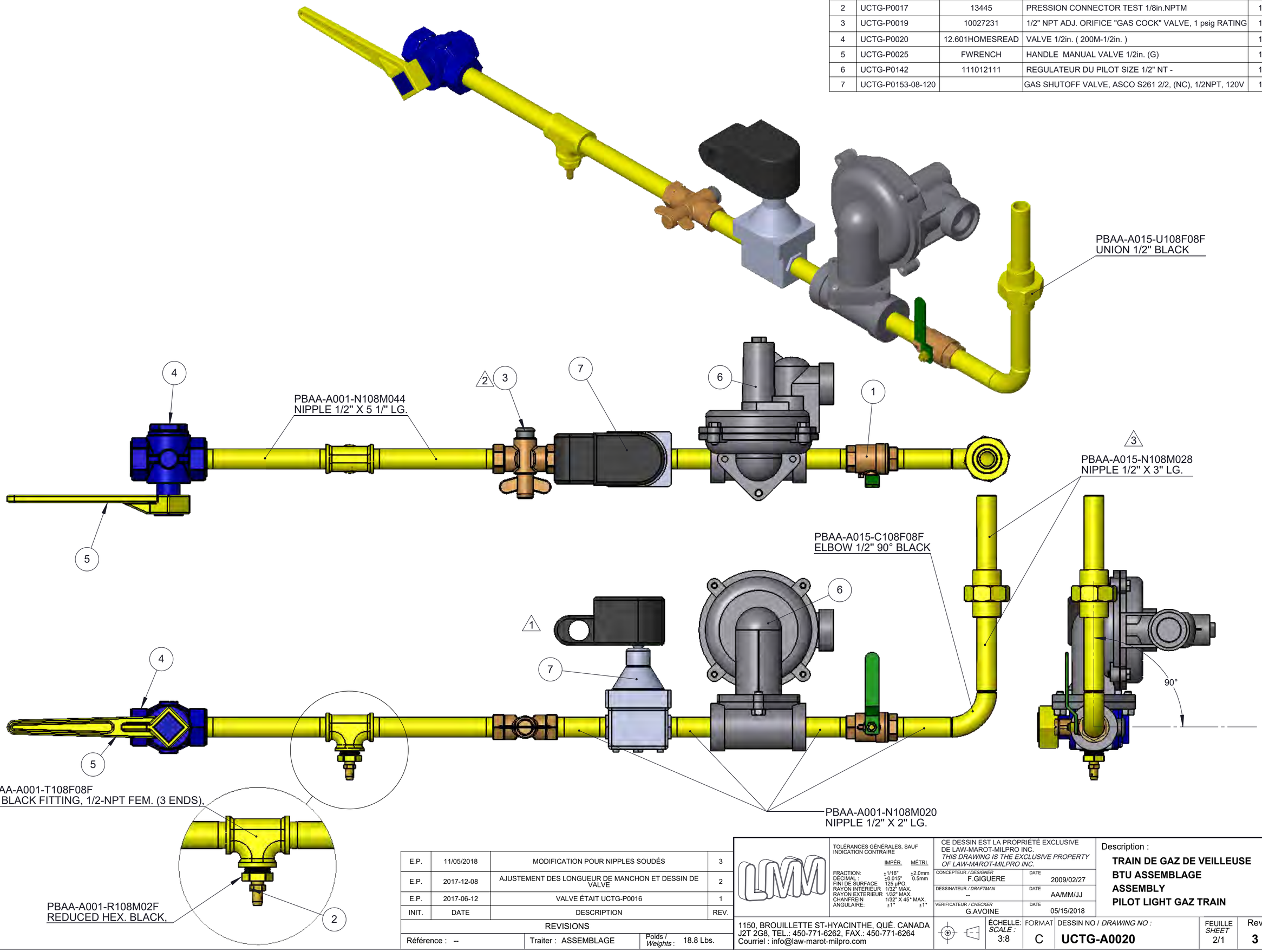

REV.	DESCRIPTION	DATE	
3	MODIFICATION POUR NIPPLES SOUDÉS	11/05/2018	E.P.
2	AJUSTEMENT DES LONGUEUR DE MANCHON ET DESSIN DE VALVE	2017-12-08	E.P.
1	VALVE ÉTAIT UCTG-P0016	2017-06-12	E.P.

REVISIONS

Référence : -- Traiter : ASSEMBLAGE Poids / *Weights* : 18.8 Lbs.

TOLÉRANCES GÉNÉRALES, SAUF INDICATION CONTRAIRE

	IMPÉR.	MÉTRI.
FRACTION:	±1/16"	±2.0mm
DÉCIMAL :	±0.015"	0.5mm
FINI DE SURFACE	125 µPO.	
RAYON INTERIEUR	1/32" MAX.	
RAYON EXTERIEUR	1/32" MAX.	
CHANFREIN	1/32" X 45° MAX.	
ANGULAIRE:	±1°	±1°

CE DESSIN EST LA PROPRIÉTÉ EXCLUSIVE DE LAW-MAROT-MILPRO INC.
THIS DRAWING IS THE EXCLUSIVE PROPERTY OF LAW-MAROT-MILPRO INC.

CONCEPTEUR / *DESIGNER*	F.GIGUERE	DATE 2009/02/27
DESSINATEUR / *DRAFTMAN*	--	DATE AA/MM/JJ
VERIFICATEUR / *CHECKER*	G.AVOINE	DATE 05/15/2018

Description :
TRAIN DE GAZ DE VEILLEUSE
BTU ASSEMBLAGE
ASSEMBLY
PILOT LIGHT GAZ TRAIN

1150, BROUILLETTE ST-HYACINTHE, QUÉ. CANADA
J2T 2G8, TEL.: 450-771-6262, FAX.: 450-771-6264
Courriel : info@law-marot-milpro.com

ÉCHELLE: *SCALE :*	FORMAT	DESSIN NO / *DRAWING NO :*	FEUILLE *SHEET*	Rev
3:8	C	**UCTG-A0020**	2/1	**3**

LAW-MAROT-MILPRO

GRAIN DRYER GAS TRAINS
TRAINS DE GAZ BRULEURS - SECHOIR A GRAIN
ZEELAND - SERIAL 16-1234S
34,000,000 BTU/HR + 34,000,000 BTU/HR

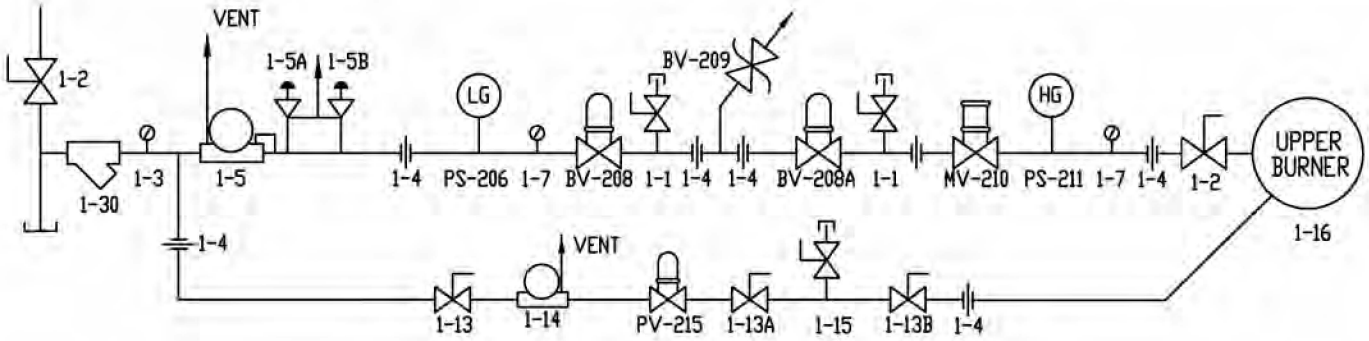

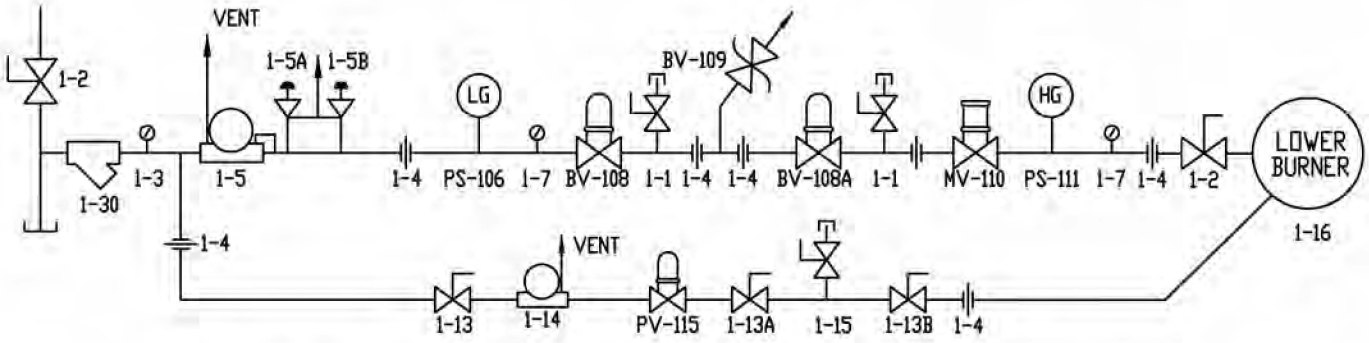

DWG.No: 16-1234S-GAZ.dwg 2017/09/06

LAW-MAROT-MILPRO

GRAIN DRYER GAS TRAINS
TRAINS DE GAZ BRULEURS - SECHOIR A GRAIN
ZEELAND - SERIAL 16-1234S
34,000,000 BTU/HR + 34,000,000 BTU/HR

ELECTRICAL SCHEMATIC
DIAGRAMME ÉLECTRIQUE

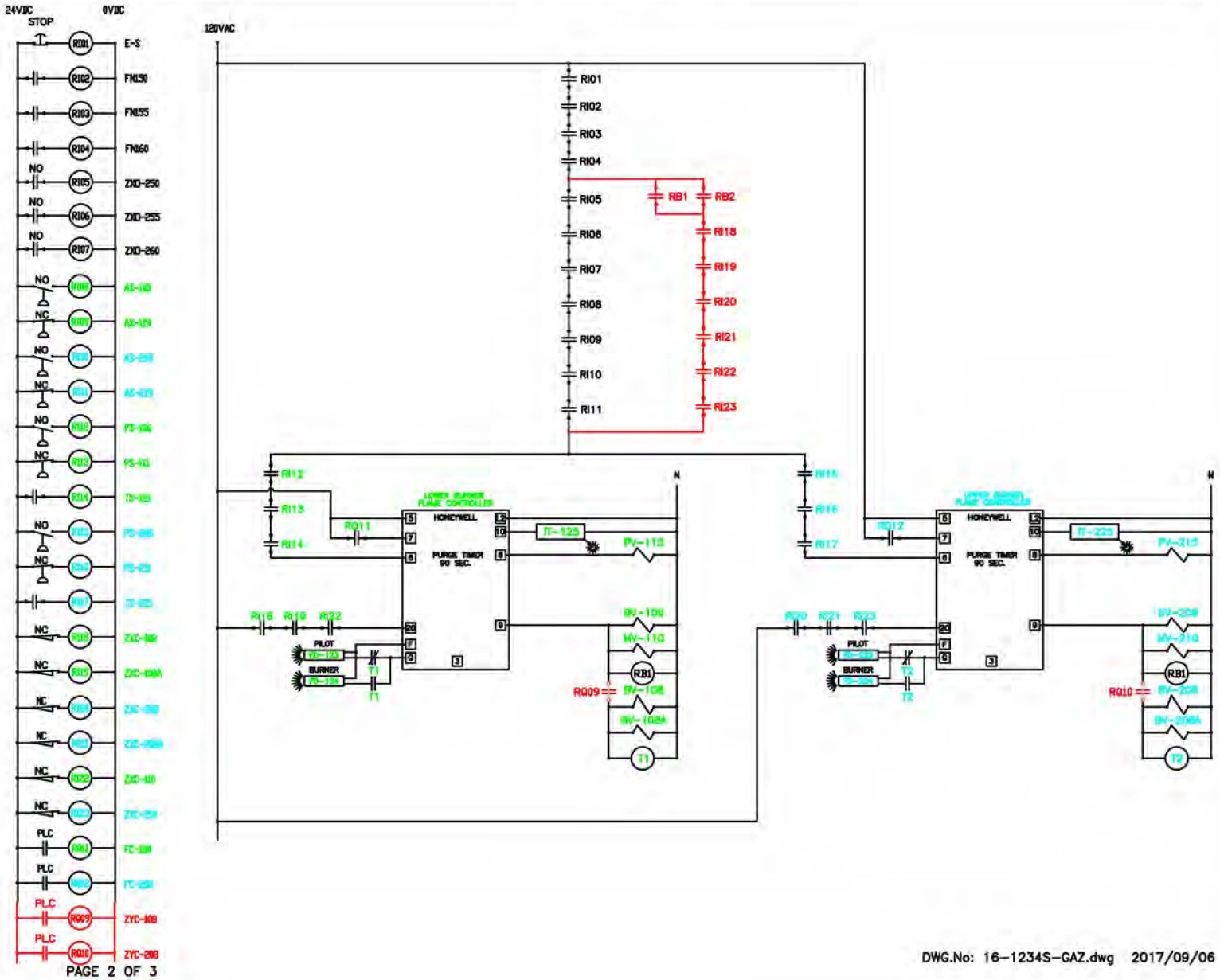

DWG.No: 16-1234S-GAZ.dwg 2017/09/06

LAW-MAROT-MILPRO

LAW GRAIN DRYER GAS TRAIN
TRAIN DE GAZ BRULEUR - SECHOIR A GRAIN LAW
ZEELAND - SERIAL 16-1234S
34,000,000 BTU/HR + 34,000,000 BTU/HR

BILL OF MATERIALS
LISTE DES COMPOSANTES

1-1	MANUAL SHUTOFF VALVE VALVE DE SÉCURITÉ MANUELLE (JENKINS) NO: 201J-1/4"
1-2	MANUAL SHUTOFF VALVE 3" VALVE DE SÉCURITÉ MANUELLE 3" (KVC) NO: 100T0300
1-3	PRESSURE GAUGE (0 @ 30psi.) GAUGE DE PRESSION (0 @ 30psi.)
1-4	COUPLING RACCORDS
1-5	GAS PRESSURE REGULATOR WITH INTERNAL RELIEF RÉGULATEUR DE PRESSION AVEC SOUPAPE INTERNE (FISHER) NO: 133H 2"NPT SPRING / RESSORT : 1.5-3 PSI
1-5A/1-5B	RELIEF VALVE SOUPAPE DE SURETÉ (FISHER) 289H-2"
1-7	PRESSURE GAUGE (0 @ 100 W.C.) GAUGE À PRESSION [0 @ 100 W.C.]
1-13	PILOT MANUAL SHUTOFF VALVE VALVE DE SÉCURITÉ MANUELLE POUR PILOTE' (JENKINS) NO: 201J-1/2"NPTF
1-13A	PILOT MANUAL SHUTOFF VALVE VALVE DE SÉCURITÉ MANUELLE POUR PILOTE (ECLIPSE) NO: 1002731
1-13B	PILOT MANUAL SHUTOFF VALVE VALVE DE SÉCURITÉ MANUELLE POUR PILOTE (HOMESTEAD) NO: 601 HOMESTEAD 1/2"
1-14	PILOT GAS PRESSURE REGULATOR RÉGULATEUR DE PRESSION DE GAZ POUR PILOTE (ITRON) NO: B42R SPRING / RESSORT : 6-16 WC
1-15	PRESSURE TEST POINT 1/8" NPT POINT DE TEST DE PRESSION 1/8" NPT
1-16	BURNER BROLEUR MIDCO MMA-2A
1-30	FILTRE EN Y" DE 3" CAST_IRON GAS Y-STRAINER 3"
BV-108/BV-108A BV-208/BV-208A	SAFETY SHUT-OFF VALVE VALVE DE SÉCURITÉ (HONEYWELL) NO:V5055C1109, ACTUATOR/ACTUATEUR NO:V4055E1040
BV-109/BV-209	AUTOMATIC VENT VALVE NORMALLY OPEN VALVE D'ÉVENT (ASCO) NO: 8214G064 - 120VAC
MV-110/MV-210	SAFETY SHUT-OFF & MODULATING VALVE VALVE MODULANTE ET SÉCURITÉ (HONEYWELL) NO:V5097B1010, ACTUATOR/ACTUATEUR NO:V9055A1055
PS-106/PS-206	LOW GAS PRESSURE SWITCH CONTACT BASSE PRESSION DE GAZ (HONEYWELL) NO: C6097A1038 [12 @ 60" W.C.]
PS-111/PS-211	HIGH GAS PRESSURE SWITCH CONTACT HAUTE PRESSION DE GAZ (HONEYWELL) NO: C6097B1044 [1.5 @ 7psig.]
PV-115/PV215	PILOT VALVE 1/2" VALVE SOLÉNOIDE PILOTE (ASCO) NO: S261SG02N3DG5
AS-118	BURNER #1 AIR FLOW SWITCH MINIMUM BRULEUR #1, CONTACT DÉBIT D'AIR MINIMUM (DUNGS) NO: AA-A2-6-2 - (0.16 @ 1.2" WC)
AS-119	BURNER #1 AIR FLOW SWITCH MAXIMUM BRULEUR #1, CONTACT DÉBIT D'AIR MAXIMUM (DUNGS) NO: AA-A2-6-3 - (0.4 @ 4" WC)
AS-218	BURNER #2 AIR FLOW SWITCH MINIMUM BRULEUR #2, CONTACT DÉBIT D'AIR MINIMUM (DUNGS) NO: AA-A2-6-2 - (0.16 @ 1.2" WC)
AS-219	BURNER #2 AIR FLOW SWITCH MAXIMUM BRULEUR #2, CONTACT DÉBIT D'AIR MAXIMUM (DUNGS) NO: AA-A2-6-3 - (0.4 @ 4" WC)
E-S	ARRÊT D'URGENCE (EM-001) EMERGENCY STOP (EM-001)
FC-100	FLAME CONTROLLER #1 ENABLE CONTROLEUR DE FLAMME #1 ACTIF
FC-200	FLAME CONTROLLER #2 ENABLE CONTROLEUR DE FLAMME #2 ACTIF
FD-123/FD-124 FD-223/FD-224	PILOT FLAME DETECTOR UV SCANNER DÉTECTEUR DE FLAMME DU PILOTE UV (HONEYWELL) NO: C7027A1072
FN-150	MAIN FAN #1 CONTACT RELAY - MOTOR RUNNING CONTACT MOTEUR EN MARCHE VENTILATEUR PRINCIPAL #1
FN-155	MAIN FAN #2 CONTACT RELAY - MOTOR RUNNING CONTACT MOTEUR EN MARCHE VENTILATEUR PRINCIPAL #2
FN-160	MAIN FAN #3 CONTACT RELAY - MOTOR RUNNING CONTACT MOTEUR EN MARCHE VENTILATEUR PRINCIPAL #3
IT-125/IT-225	IGNITION TRANSFORMER TRANSFORMATEUR D'ALLUMAGE (ALLANSON) NO: 1092S
RQ11	PLC CONTACT : ENABLE BOTTOM BURNER CONTACT PLC: ACTIVE BROLEUR DU BAS
RQ12	PLC CONTACT : ENABLE TOP BURNER CONTACT PLC: ACTIVE BROLEUR DU HAUT
RB1	LOWER BURNER MAIN FLAME ENABLED BRULEUR DU BAS - FLAMME PRINCIPALE ACTIVÉE
RB2	TOP BURNER MAIN FLAME ENABLED BRULEUR DU HAUT - FLAMME PRINCIPALE ACTIVÉE
TS-121	BURNER HIGH LIMIT TEMPERATURE SWITCH #1 CONTACT HAUTE LIMITE DE TEMPÉRATURE #1 (FUTURDESIGN) NO: FDC-L91-4110B
TS-221	BURNER HIGH LIMIT TEMPERATURE SWITCH #2 CONTACT HAUTE LIMITE DE TEMPÉRATURE #2 (FUTURDESIGN) NO: FDC-L91-4110B
T1/T2	FLAME DETECTOR TIMER RELAY 0 TO 10 SEC. DÉTECTEUR DE FLAMME - RELAIS TEMPORISATEUR 0 À 10 SEC.
ZXC-108/ZXC-108A ZXC-208/ZXC-208A	VALVE CLOSED INDICATION SWITCH (INSIDE SAFETY SHUT-OFF VALVE) CONTACT VALVE MODULANTE FERMÉE (À L'INTÉRIEUR DE LA VALVE DE SÉCURITÉ) (HONEYWELL) NO: V4055D1027
ZXC-110	LOW FIRE START - AUXILIARY SWITCH INSTALLED IN ACTUATOR MV-110 CONFIRMATION D'ALLUMAGE À BAS FEU-INDICATEUR AUXILIARE MONTÉ SUR VALVE MV-110 (HONEYWELL) AUXILIARY SWITCH NO: 133568
ZXC-210	LOW FIRE START - AUXILIARY SWITCH INSTALLED IN ACTUATOR MV-210 CONFIRMATION D'ALLUMAGE À BAS FEU-INDICATEUR AUXILIARE MONTÉ SUR VALVE MV-210 (HONEYWEL)L AUXILIARY SWITCH NO: 133568
ZXO-250	FAN LOUVER #1 OPEN SWITCH LOUVRE #1 VENTILATEUR OUVERT
ZXO-255	FAN LOUVER #2 OPEN SWITCH LOUVRE #2 VENTILATEUR OUVERT
ZXO-260	FAN LOUVER #3 OPEN SWITCH LOUVRE #3 VENTILATEUR OUVERT
ZYC-108	CLOSE GASTRAIN ON/OFF VALVES BURNER #1 FERME VALVE ON/OFF BRULEUR #1
ZYC-208	CLOSE GASTRAIN ON/OFF VALVES BURNER #2 FERME VALVE ON/OFF BRULEUR #2

Monthly and 12-month Rolling Records for Bushels of Grain Received and Shipped				
Month-Yr	Soybeans Received (Bushels)	12-Month Rolling Total Soybeans Received (Bu)	Soybeans Shipped (Bushels)	12-Month Rolling Total Soybeans Shipped (Bu)
Jun-2020	4,616,471	17,049,452	0	4,896
Jul-2020	3,048,620	19,777,743	0	4,896
Aug-2020	2,357,826	21,024,788	0	4,896
Sep-2020	1,813,033	22,133,329	0	4,896
Oct-2020	5,449,675	27,057,821	0	4,896
Nov-2020	2,726,587	29,423,754	0	4,896
Dec-2020	3,940,422	32,517,437	0	4,896
Jan-2021	4,168,332	36,427,348	0	0
Feb-2021	3,216,978	39,493,646	0	0
Mar-2021	3,130,785	40,275,364	0	0
Apr-2021	2,194,730	39,806,642	0	0
May-2021	2,812,524	39,475,982	0	0
Jun-2021	3,614,426	38,473,937	0	0
Jul-2021	2,492,111	37,917,428	0	0
Aug-2021	2,046,225	37,605,826	0	0
Sep-2021	2,772,921	38,565,715	0	0
Oct-2021	5,193,058	38,309,098	0	0
Nov-2021	4,668,836	40,251,347	0	0
Dec-2021	2,980,442	39,291,367	0	0
Jan-2022	3,858,314	38,981,350	0	0
Feb-2022	3,378,746	39,143,118	0	0
Mar-2022	2,536,674	38,549,007	0	0
Apr-2022	3,448,831	39,803,108	0	0
May-2022	2,554,548	39,545,132	0	0
Jun-2022	3,920,775	39,851,481	0	0

DAILY DIFFERENTIAL PRESSURE READINGS
SHIPPING/RECEIVING

Date: 2-01-22

All values must be taken from associated equipment while the equipment is in operation. If a unit does not operate, select "NO" on Equipment Operating Today section. Any units found to be outside of the designated operational limits need prompt reporting and corrective action. All deviations shall include comments on the bottom section of the form. Include a description and corrective actions.

DAY SHIFT READINGS

Supervisor: Ryan Estrada

Unit ID	Unit Name (Permit Emission Unit)	Operator Initials	Operating Today?	Time of Reading	Pressure Drop (in. W.C.)	
					Reading	Limit
KICE	RECEIVING BAGHOUSE (EUSHIPRECEIVE)	JO	Yes	0800	3.84	0.5 - 8
PDT-50415-01 Loadout Bin 410	HULL LOADOUT BAGHOUSE 1 (EUHULLLOADOUT)	JO	Yes	0800	0.87	0.2 - 5
PDT-50425-01 Loadout Bin 420	HULL LOADOUT BAGHOUSE 2 (EUHULLLOADOUT)	JO	NO			0.2 - 5
PDT-50850-01	LOADOUT BAGHOUSE (EULOADOUT)	JO	Yes	0800	0.97	0.2 - 5
PDT-50950-01	INGREDIENTS BAGHOUSE (EUINGREDIENTS)	JO	NO			0.2 - 5

Any pressure drop reading above the designated limit must be reported to EHS Manager

NIGHT SHIFT READINGS

Supervisor: Tyler Allen

Unit ID	Unit Name (Permit Emission Unit)	Operator Initials	Operating Today?	Time of Reading	Pressure Drop (in. W.C.)	
					Reading	Limit
KICE	RECEIVING BAGHOUSE (EUSHIPRECEIVE)	RB	Yes	2107	4.16	0.5 - 8
PDT-50415-01 Loadout Bin 410	HULL LOADOUT BAGHOUSE 1 (EUHULLLOADOUT)	RB	Yes	2107	0.89	0.2 - 5
PDT-50425-01 Loadout Bin 420	HULL LOADOUT BAGHOUSE 2 (EUHULLLOADOUT)	RB	NO			0.2 - 5
PDT-50850-01	LOADOUT BAGHOUSE (EULOADOUT)	RB	Yes	2107	1.09	0.2 - 5
PDT-50950-01	INGREDIENTS BAGHOUSE (EUINGREDIENTS)	RB	No			0.2 - 5

Any pressure drop reading above the designated limit must be reported to EHS Manager

Comments/Corrective Actions:

DAILY DIFFERENTIAL PRESSURE READINGS
SHIPPING/RECEIVING

Date: 2-2-22

All values must be taken from associated equipment while the equipment is in operation. If a unit does not operate, select "NO" on Equipment Operating Today section. Any units found to be outside of the designated operational limits need prompt reporting and corrective action. All deviations shall include comments on the bottom section of the form. Include a description and corrective actions.

DAY SHIFT READINGS

Supervisor: [signature]

Unit ID	Unit Name (Permit Emission Unit)	Operator Initials	Operating Today?	Time of Reading	Pressure Drop (in. W.C.)	
					Reading	Limit
KICE	RECEIVING BAGHOUSE (EUSHIPRECEIVE)	JO	Yes	0745	4.14	0.5 - 8
PDT-50415-01 Loadout Bin 410	HULL LOADOUT BAGHOUSE 1 (EUHULLLOADOUT)	JO	Yes	1310	0.88	0.2 - 5
PDT-50425-01 Loadout Bin 420	HULL LOADOUT BAGHOUSE 2 (EUHULLLOADOUT)	JO	Yes	0745	0.47	0.2 - 5
PDT-50850-01	LOADOUT BAGHOUSE (EULOADOUT)	JO	Yes	0745	0.98	0.2 - 5
PDT-50950-01	INGREDIENTS BAGHOUSE (EUINGREDIENTS)	JO	NO			0.2 - 5

Any pressure drop reading above the designated limit must be reported to EHS Manager

NIGHT SHIFT READINGS

Supervisor: [signature]

Unit ID	Unit Name (Permit Emission Unit)	Operator Initials	Operating Today?	Time of Reading	Pressure Drop (in. W.C.)	
					Reading	Limit
KICE	RECEIVING BAGHOUSE (EUSHIPRECEIVE)	KJ	NO			0.5 - 8
PDT-50415-01 Loadout Bin 410	HULL LOADOUT BAGHOUSE 1 (EUHULLLOADOUT)	KJ	NO			0.2 - 5
PDT-50425-01 Loadout Bin 420	HULL LOADOUT BAGHOUSE 2 (EUHULLLOADOUT)	KJ	NO			0.2 - 5
PDT-50850-01	LOADOUT BAGHOUSE (EULOADOUT)	KJ	Yes	2133	1.23	0.2 - 5
PDT-50950-01	INGREDIENTS BAGHOUSE (EUINGREDIENTS)	KJ	NO			0.2 - 5

Any pressure drop reading above the designated limit must be reported to EHS Manager

Comments/Corrective Actions:

DAILY DIFFERENTIAL PRESSURE READINGS
SHIPPING/RECEIVING

Date: 2-3-22

All values must be taken from associated equipment while the equipment is in operation. If a unit does not operate, select "NO" on Equipment Operating Today section. Any units found to be outside of the designated operational limits need prompt reporting and corrective action. All deviations shall include comments on the bottom section of the form. Include a description and corrective actions.

DAY SHIFT READINGS

Supervisor: [signature]

Unit ID	Unit Name (Permit Emission Unit)	Operator Initials	Operating Today?	Time of Reading	Pressure Drop (in. W.C.)	
					Reading	Limit
KICE	RECEIVING BAGHOUSE (EUSHIPRECEIVE)	JO	Yes	0800	3.81	0.5 - 8
PDT-50415-01 Loadout Bin 410	HULL LOADOUT BAGHOUSE 1 (EUHULLLOADOUT)	JO	Yes	1340	0.88	0.2 - 5
PDT-50425-01 Loadout Bin 420	HULL LOADOUT BAGHOUSE 2 (EUHULLLOADOUT)	JO	NO			0.2 - 5
PDT-50850-01	LOADOUT BAGHOUSE (EULOADOUT)	JO	Yes	1340	0.96	0.2 - 5
PDT-50950-01	INGREDIENTS BAGHOUSE (EUINGREDIENTS)	JO	NO			0.2 - 5

Any pressure drop reading above the designated limit must be reported to EHS Manager

NIGHT SHIFT READINGS

Supervisor: [signature]

Unit ID	Unit Name (Permit Emission Unit)	Operator Initials	Operating Today?	Time of Reading	Pressure Drop (in. W.C.)	
					Reading	Limit
KICE	RECEIVING BAGHOUSE (EUSHIPRECEIVE)	KJ	Yes	0141	4.31	0.5 - 8
PDT-50415-01 Loadout Bin 410	HULL LOADOUT BAGHOUSE 1 (EUHULLLOADOUT)	KJ	Yes	0141	0.58	0.2 - 5
PDT-50425-01 Loadout Bin 420	HULL LOADOUT BAGHOUSE 2 (EUHULLLOADOUT)	KJ	NO			0.2 - 5
PDT-50850-01	LOADOUT BAGHOUSE (EULOADOUT)	KJ	Yes	0141	0.59	0.2 - 5
PDT-50950-01	INGREDIENTS BAGHOUSE (EUINGREDIENTS)	KJ	NO			0.2 - 5

Any pressure drop reading above the designated limit must be reported to EHS Manager

Comments/Corrective Actions:

DAILY DIFFERENTIAL PRESSURE READINGS
SHIPPING/RECEIVING

Date: 2-4-22

All values must be taken from associated equipment while the equipment is in operation. If a unit does not operate, select "NO" on Equipment Operating Today section. Any units found to be outside of the designated operational limits need prompt reporting and corrective action. All deviations shall include comments on the bottom section of the form. Include a description and corrective actions.

DAY SHIFT READINGS

Supervisor: Ryan Smith

Unit ID	Unit Name (Permit Emission Unit)	Operator Initials	Operating Today?	Time of Reading	Pressure Drop (in. W.C.)	
					Reading	Limit
KICE	RECEIVING BAGHOUSE (EUSHIPRECEIVE)	JO	Yes	0755	4.03	0.5 - 8
PDT-50415-01 Loadout Bin 410	HULL LOADOUT BAGHOUSE 1 (EUHULLLOADOUT)	JO	Yes	0755	0.78	0.2 - 5
PDT-50425-01 Loadout Bin 420	HULL LOADOUT BAGHOUSE 2 (EUHULLLOADOUT)	JO	NO			0.2 - 5
PDT-50850-01	LOADOUT BAGHOUSE (EULOADOUT)	JO	Yes	0755	0.77	0.2 - 5
PDT-50950-01	INGREDIENTS BAGHOUSE (EUINGREDIENTS)	JO	NO			0.2 - 5

Any pressure drop reading above the designated limit must be reported to EHS Manager

NIGHT SHIFT READINGS

Supervisor: [illegible]

Unit ID	Unit Name (Permit Emission Unit)	Operator Initials	Operating Today?	Time of Reading	Pressure Drop (in. W.C.)	
					Reading	Limit
KICE	RECEIVING BAGHOUSE (EUSHIPRECEIVE)	JS	YeS	2030	4.03	0.5 - 8
PDT-50415-01 Loadout Bin 410	HULL LOADOUT BAGHOUSE 1 (EUHULLLOADOUT)	JS	NO			0.2 - 5
PDT-50425-01 Loadout Bin 420	HULL LOADOUT BAGHOUSE 2 (EUHULLLOADOUT)	JS	NO			0.2 - 5
PDT-50850-01	LOADOUT BAGHOUSE (EULOADOUT)	JS	YeS	0145	0.91	0.2 - 5
PDT-50950-01	INGREDIENTS BAGHOUSE (EUINGREDIENTS)	JS	NO			0.2 - 5

Any pressure drop reading above the designated limit must be reported to EHS Manager

Comments/Corrective Actions:

DAILY DIFFERENTIAL PRESSURE READINGS
SHIPPING/RECEIVING

Date: 2-5-22

All values must be taken from associated equipment while the equipment is in operation. If a unit does not operate, select "NO" on Equipment Operating Today section. Any units found to be outside of the designated operational limits need prompt reporting and corrective action. All deviations shall include comments on the bottom section of the form. Include a description and corrective actions.

DAY SHIFT READINGS

Supervisor: Jarod Horn

Unit ID	Unit Name (Permit Emission Unit)	Operator Initials	Operating Today?	Time of Reading	Pressure Drop (in. W.C.)	
					Reading	Limit
KICE	RECEIVING BAGHOUSE (EUSHIPRECEIVE)	RS	Yes	1030	3.77	0.5 - 8
PDT-50415-01 Loadout Bin 410	HULL LOADOUT BAGHOUSE 1 (EUHULLLOADOUT)	RS	NO			0.2 - 5
PDT-50425-01 Loadout Bin 420	HULL LOADOUT BAGHOUSE 2 (EUHULLLOADOUT)	RS	NO			0.2 - 5
PDT-50850-01	LOADOUT BAGHOUSE (EULOADOUT)	RS	Yes	10:30	1.51	0.2 - 5
PDT-50950-01	INGREDIENTS BAGHOUSE (EUINGREDIENTS)	RS	NO			0.2 - 5

Any pressure drop reading above the designated limit must be reported to EHS Manager

NIGHT SHIFT READINGS

Supervisor: Ray Hamlett

Unit ID	Unit Name (Permit Emission Unit)	Operator Initials	Operating Today?	Time of Reading	Pressure Drop (in. W.C.)	
					Reading	Limit
KICE	RECEIVING BAGHOUSE (EUSHIPRECEIVE)	JS	YeS	0150	4.11	0.5 - 8
PDT-50415-01 Loadout Bin 410	HULL LOADOUT BAGHOUSE 1 (EUHULLLOADOUT)	JS	NO			0.2 - 5
PDT-50425-01 Loadout Bin 420	HULL LOADOUT BAGHOUSE 2 (EUHULLLOADOUT)	JS	NO			0.2 - 5
PDT-50850-01	LOADOUT BAGHOUSE (EULOADOUT)	JS	Yes	2300	0.86	0.2 - 5
PDT-50950-01	INGREDIENTS BAGHOUSE (EUINGREDIENTS)	JS	NO			0.2 - 5

Any pressure drop reading above the designated limit must be reported to EHS Manager

Comments/Corrective Actions:

DAILY DIFFERENTIAL PRESSURE READINGS
SHIPPING/RECEIVING

Date: 2-6-22

All values must be taken from associated equipment while the equipment is in operation. If a unit does not operate, select "NO" on Equipment Operating Today section. Any units found to be outside of the designated operational limits need prompt reporting and corrective action. All deviations shall include comments on the bottom section of the form. Include a description and corrective actions.

DAY SHIFT READINGS

Supervisor: [signature]

Unit ID	Unit Name (Permit Emission Unit)	Operator Initials	Operating Today?	Time of Reading	Pressure Drop (in. W.C.)	
					Reading	Limit
KICE	RECEIVING BAGHOUSE (EUSHIPRECEIVE)	JO	Yes	0930	3.98	0.5 - 8
PDT-50415-01 Loadout Bin 410	HULL LOADOUT BAGHOUSE 1 (EUHULLLOADOUT)	JO	NO			0.2 - 5
PDT-50425-01 Loadout Bin 420	HULL LOADOUT BAGHOUSE 2 (EUHULLLOADOUT)	JO	NO			0.2 - 5
PDT-50850-01	LOADOUT BAGHOUSE (EULOADOUT)	JO	Yes	0930	0.88	0.2 - 5
PDT-50950-01	INGREDIENTS BAGHOUSE (EUINGREDIENTS)	JO	NO			0.2 - 5

Any pressure drop reading above the designated limit must be reported to EHS Manager

NIGHT SHIFT READINGS

Supervisor: [signature]

Unit ID	Unit Name (Permit Emission Unit)	Operator Initials	Operating Today?	Time of Reading	Pressure Drop (in. W.C.)	
					Reading	Limit
KICE	RECEIVING BAGHOUSE (EUSHIPRECEIVE)	JS	Yes	2230	4.03	0.5 - 8
PDT-50415-01 Loadout Bin 410	HULL LOADOUT BAGHOUSE 1 (EUHULLLOADOUT)	JS	NO			0.2 - 5
PDT-50425-01 Loadout Bin 420	HULL LOADOUT BAGHOUSE 2 (EUHULLLOADOUT)	JS	NO			0.2 - 5
PDT-50850-01	LOADOUT BAGHOUSE (EULOADOUT)	JS	Yes	0240	0.84	0.2 - 5
PDT-50950-01	INGREDIENTS BAGHOUSE (EUINGREDIENTS)	JS	NO			0.2 - 5

Any pressure drop reading above the designated limit must be reported to EHS Manager

Comments/Corrective Actions:

DAILY DIFFERENTIAL PRESSURE READINGS
SHIPPING/RECEIVING

Date: 2-7-22

All values must be taken from associated equipment while the equipment is in operation. If a unit does not operate, select "NO" on Equipment Operating Today section. Any units found to be outside of the designated operational limits need prompt reporting and corrective action. All deviations shall include comments on the bottom section of the form. Include a description and corrective actions.

DAY SHIFT READINGS

Supervisor: [signature]

Unit ID	Unit Name (Permit Emission Unit)	Operator Initials	Operating Today?	Time of Reading	Pressure Drop (in. W.C.)	
					Reading	Limit
KICE	RECEIVING BAGHOUSE (EUSHIPRECEIVE)	BP	yes	09:24	3.72	0.5 - 8
PDT-50415-01 Loadout Bin 410	HULL LOADOUT BAGHOUSE 1 (EUHULLLOADOUT)	BP	yes	09:24	0.83	0.2 - 5
PDT-50425-01 Loadout Bin 420	HULL LOADOUT BAGHOUSE 2 (EUHULLLOADOUT)	BP	NO			0.2 - 5
PDT-50850-01	LOADOUT BAGHOUSE (EULOADOUT)	BP	yes	09:24	0.90	0.2 - 5
PDT-50950-01	INGREDIENTS BAGHOUSE (EUINGREDIENTS)	BP	NO			0.2 - 5

Any pressure drop reading above the designated limit must be reported to EHS Manager.

NIGHT SHIFT READINGS

Supervisor: [signature]

Unit ID	Unit Name (Permit Emission Unit)	Operator Initials	Operating Today?	Time of Reading	Pressure Drop (in. W.C.)	
					Reading	Limit
KICE	RECEIVING BAGHOUSE (EUSHIPRECEIVE)	JS	NO			0.5 - 8
PDT-50415-01 Loadout Bin 410	HULL LOADOUT BAGHOUSE 1 (EUHULLLOADOUT)	JS	Yes	2115	0.76	0.2 - 5
PDT-50425-01 Loadout Bin 420	HULL LOADOUT BAGHOUSE 2 (EUHULLLOADOUT)	JS	NO			0.2 - 5
PDT-50850-01	LOADOUT BAGHOUSE (EULOADOUT)	JS	YES	2115	0.94	0.2 - 5
PDT-50950-01	INGREDIENTS BAGHOUSE (EUINGREDIENTS)	JS	NO			0.2 - 5

Any pressure drop reading above the designated limit must be reported to EHS Manager

Comments/Corrective Actions:

DAILY DIFFERENTIAL PRESSURE READINGS
SHIPPING/RECEIVING

Date: 2-8-22

All values must be taken from associated equipment while the equipment is in operation. If a unit does not operate, select "NO" on Equipment Operating Today section. Any units found to be outside of the designated operational limits need prompt reporting and corrective action. All deviations shall include comments on the bottom section of the form. Include a description and corrective actions.

DAY SHIFT READINGS

Supervisor: [signature]

Unit ID	Unit Name (Permit Emission Unit)	Operator Initials	Operating Today?	Time of Reading	Pressure Drop (in. W.C.)	
					Reading	Limit
KICE	RECEIVING BAGHOUSE (EUSHIPRECEIVE)	BP	yes	08:00	3.97	0.5 - 8
PDT-50415-01 Loadout Bin 410	HULL LOADOUT BAGHOUSE 1 (EUHULLLOADOUT)	BP	Yes	0949	0.91	0.2 - 5
PDT-50425-01 Loadout Bin 420	HULL LOADOUT BAGHOUSE 2 (EUHULLLOADOUT)	BP	NO			0.2 - 5
PDT-50850-01	LOADOUT BAGHOUSE (EULOADOUT)	BP	yes	08:00	1.10	0.2 - 5
PDT-50950-01	INGREDIENTS BAGHOUSE (EUINGREDIENTS)	BP	NO			0.2 - 5

Any pressure drop reading above the designated limit must be reported to EHS Manager

NIGHT SHIFT READINGS

Supervisor: [signature]

Unit ID	Unit Name (Permit Emission Unit)	Operator Initials	Operating Today?	Time of Reading	Pressure Drop (in. W.C.)	
					Reading	Limit
KICE	RECEIVING BAGHOUSE (EUSHIPRECEIVE)	NG	Yes	0331	3.50	0.5 - 8
PDT-50415-01 Loadout Bin 410	HULL LOADOUT BAGHOUSE 1 (EUHULLLOADOUT)	NG	NO			0.2 - 5
PDT-50425-01 Loadout Bin 420	HULL LOADOUT BAGHOUSE 2 (EUHULLLOADOUT)	NG	NO			0.2 - 5
PDT-50850-01	LOADOUT BAGHOUSE (EULOADOUT)	NG	Yes	0331	1.19	0.2 - 5
PDT-50950-01	INGREDIENTS BAGHOUSE (EUINGREDIENTS)	NG	NO			0.2 - 5

Any pressure drop reading above the designated limit must be reported to EHS Manager

Comments/Corrective Actions:

DAILY DIFFERENTIAL PRESSURE READINGS
SHIPPING/RECEIVING

Date: 2-9-22

All values must be taken from associated equipment while the equipment is in operation. If a unit does not operate, select "NO" on Equipment Operating Today section. Any units found to be outside of the designated operational limits need prompt reporting and corrective action. All deviations shall include comments on the bottom section of the form. Include a description and corrective actions.

DAY SHIFT READINGS

Supervisor: [signature]

Unit ID	Unit Name (Permit Emission Unit)	Operator Initials	Operating Today?	Time of Reading	Pressure Drop (in. W.C.)	
					Reading	Limit
KICE	RECEIVING BAGHOUSE (EUSHIPRECEIVE)	BP	yes	07:49	3.92	0.5 - 8
PDT-50415-01 Loadout Bin 410	HULL LOADOUT BAGHOUSE 1 (EUHULLLOADOUT)	BP	yes	07:49	0.76	0.2 - 5
PDT-50425-01 Loadout Bin 420	HULL LOADOUT BAGHOUSE 2 (EUHULLLOADOUT)	BP	NO			0.2 - 5
PDT-50850-01	LOADOUT BAGHOUSE (EULOADOUT)	BP	yes	07:49	1.06	0.2 - 5
PDT-50950-01	INGREDIENTS BAGHOUSE (EUINGREDIENTS)	BP	NO			0.2 - 5

Any pressure drop reading above the designated limit must be reported to EHS Manager

NIGHT SHIFT READINGS

Supervisor: [signature]

Unit ID	Unit Name (Permit Emission Unit)	Operator Initials	Operating Today?	Time of Reading	Pressure Drop (in. W.C.)	
					Reading	Limit
KICE	RECEIVING BAGHOUSE (EUSHIPRECEIVE)	~~JS~~ JS	~~NO~~ 2-10-22 Yes	0210	4.25	0.5 - 8
PDT-50415-01 Loadout Bin 410	HULL LOADOUT BAGHOUSE 1 (EUHULLLOADOUT)	JS	NO			0.2 - 5
PDT-50425-01 Loadout Bin 420	HULL LOADOUT BAGHOUSE 2 (EUHULLLOADOUT)	JS	NO			0.2 - 5
PDT-50850-01	LOADOUT BAGHOUSE (EULOADOUT)	JS	Yes	2340	1.11	0.2 - 5
PDT-50950-01	INGREDIENTS BAGHOUSE (EUINGREDIENTS)	JS	NO			0.2 - 5

Any pressure drop reading above the designated limit must be reported to EHS Manager

Comments/Corrective Actions:

DAILY DIFFERENTIAL PRESSURE READINGS
SHIPPING/RECEIVING

Date: 2-10-22

All values must be taken from associated equipment while the equipment is in operation. If a unit does not operate, select "NO" on Equipment Operating Today section. Any units found to be outside of the designated operational limits need prompt reporting and corrective action. All deviations shall include comments on the bottom section of the form. Include a description and corrective actions.

DAY SHIFT READINGS

Supervisor: [signature]

Unit ID	Unit Name (Permit Emission Unit)	Operator Initials	Operating Today?	Time of Reading	Pressure Drop (in. W.C.)	
					Reading	Limit
KICE	RECEIVING BAGHOUSE (EUSHIPRECEIVE)	BP	yes	09:10	3.87	0.5 - 8
PDT-50415-01 Loadout Bin 410	HULL LOADOUT BAGHOUSE 1 (EUHULLLOADOUT)	BP	yes	09:10	0.82	0.2 - 5
PDT-50425-01 Loadout Bin 420	HULL LOADOUT BAGHOUSE 2 (EUHULLLOADOUT)	BP	NO			0.2 - 5
PDT-50850-01	LOADOUT BAGHOUSE (EULOADOUT)	BP	yes	09:10	0.91	0.2 - 5
PDT-50950-01	INGREDIENTS BAGHOUSE (EUINGREDIENTS)	BP	NO			0.2 - 5

Any pressure drop reading above the designated limit must be reported to EHS Manager

NIGHT SHIFT READINGS

Supervisor: [signature]

Unit ID	Unit Name (Permit Emission Unit)	Operator Initials	Operating Today?	Time of Reading	Pressure Drop (in. W.C.)	
					Reading	Limit
KICE	RECEIVING BAGHOUSE (EUSHIPRECEIVE)	JS	NO			0.5 - 8
PDT-50415-01 Loadout Bin 410	HULL LOADOUT BAGHOUSE 1 (EUHULLLOADOUT)	JS	Yes	1730	0.78	0.2 - 5
PDT-50425-01 Loadout Bin 420	HULL LOADOUT BAGHOUSE 2 (EUHULLLOADOUT)	JS	NO			0.2 - 5
PDT-50850-01	LOADOUT BAGHOUSE (EULOADOUT)	JS	Yes	2030	1.11	0.2 - 5
PDT-50950-01	INGREDIENTS BAGHOUSE (EUINGREDIENTS)	JS	NO			0.2 - 5

Any pressure drop reading above the designated limit must be reported to EHS Manager

Comments/Corrective Actions:

DAILY DIFFERENTIAL PRESSURE READINGS
SHIPPING/RECEIVING

Date: 2-11-22

All values must be taken from associated equipment while the equipment is in operation. If a unit does not operate, select "NO" on Equipment Operating Today section. Any units found to be outside of the designated operational limits need prompt reporting and corrective action. All deviations shall include comments on the bottom section of the form. Include a description and corrective actions.

DAY SHIFT READINGS

Supervisor: [signature]

Unit ID	Unit Name (Permit Emission Unit)	Operator Initials	Operating Today?	Time of Reading	Pressure Drop (in. W.C.)	
					Reading	Limit
KICE	RECEIVING BAGHOUSE (EUSHIPRECEIVE)	BP	yes	07:45	4.20	0.5 - 8
PDT-50415-01 Loadout Bin 410	HULL LOADOUT BAGHOUSE 1 (EUHULLLOADOUT)	BP	yes ~~NO~~ 2-11-22 BP	08:26	0.82	0.2 - 5
PDT-50425-01 Loadout Bin 420	HULL LOADOUT BAGHOUSE 2 (EUHULLLOADOUT)	BP	yes	07:45	0.31	0.2 - 5
PDT-50850-01	LOADOUT BAGHOUSE (EULOADOUT)	BP	yes	07:45	1.20	0.2 - 5
PDT-50950-01	INGREDIENTS BAGHOUSE (EUINGREDIENTS)	BP	NO			0.2 - 5

Any pressure drop reading above the designated limit must be reported to EHS Manager

NIGHT SHIFT READINGS

Supervisor: [signature]

Unit ID	Unit Name (Permit Emission Unit)	Operator Initials	Operating Today?	Time of Reading	Pressure Drop (in. W.C.)	
					Reading	Limit
KICE	RECEIVING BAGHOUSE (EUSHIPRECEIVE)	G.L.	yes	0200	4.17	0.5 - 8
PDT-50415-01 Loadout Bin 410	HULL LOADOUT BAGHOUSE 1 (EUHULLLOADOUT)	G.L.	NO			0.2 - 5
PDT-50425-01 Loadout Bin 420	HULL LOADOUT BAGHOUSE 2 (EUHULLLOADOUT)	G.L.	NO			0.2 - 5
PDT-50850-01	LOADOUT BAGHOUSE (EULOADOUT)	G.L.	yes	0200	1.04	0.2 - 5
PDT-50950-01	INGREDIENTS BAGHOUSE (EUINGREDIENTS)	G.L.	NO			0.2 - 5

Any pressure drop reading above the designated limit must be reported to EHS Manager

Comments/Corrective Actions:

DAILY DIFFERENTIAL PRESSURE READINGS
SHIPPING/RECEIVING

Date: 2-12-22

All values must be taken from associated equipment while the equipment is in operation. If a unit does not operate, select "NO" on Equipment Operating Today section. Any units found to be outside of the designated operational limits need prompt reporting and corrective action. All deviations shall include comments on the bottom section of the form. Include a description and corrective actions.

DAY SHIFT READINGS

Supervisor: [signature]

Unit ID	Unit Name (Permit Emission Unit)	Operator Initials	Operating Today?	Time of Reading	Pressure Drop (in. W.C.)	
					Reading	Limit
KICE	RECEIVING BAGHOUSE (EUSHIPRECEIVE)	JY	Yes	10:15	1.02	0.5 - 8
PDT-50415-01 Loadout Bin 410	HULL LOADOUT BAGHOUSE 1 (EUHULLLOADOUT)	JY	Yes	12:18	0.81	0.2 - 5
PDT-50425-01 Loadout Bin 420	HULL LOADOUT BAGHOUSE 2 (EUHULLLOADOUT)	JY	No	—	—	0.2 - 5
PDT-50850-01	LOADOUT BAGHOUSE (EULOADOUT)	JY	Yes	10:20	1.07	0.2 - 5
PDT-50950-01	INGREDIENTS BAGHOUSE (EUINGREDIENTS)	JY	No	—	—	0.2 - 5

Any pressure drop reading above the designated limit must be reported to EHS Manager

NIGHT SHIFT READINGS

Supervisor: Bryan M O'Rourke

Unit ID	Unit Name (Permit Emission Unit)	Operator Initials	Operating Today?	Time of Reading	Pressure Drop (in. W.C.)	
					Reading	Limit
KICE	RECEIVING BAGHOUSE (EUSHIPRECEIVE)	KJ	no			0.5 - 8
PDT-50415-01 Loadout Bin 410	HULL LOADOUT BAGHOUSE 1 (EUHULLLOADOUT)	KJ	no			0.2 - 5
PDT-50425-01 Loadout Bin 420	HULL LOADOUT BAGHOUSE 2 (EUHULLLOADOUT)	KJ	no			0.2 - 5
PDT-50850-01	LOADOUT BAGHOUSE (EULOADOUT)	KJ	Yes	0119	0.71	0.2 - 5
PDT-50950-01	INGREDIENTS BAGHOUSE (EUINGREDIENTS)	KJ	no			0.2 - 5

Any pressure drop reading above the designated limit must be reported to EHS Manager

Comments/Corrective Actions:

DAILY DIFFERENTIAL PRESSURE READINGS
SHIPPING/RECEIVING

Date: 2-13-22

All values must be taken from associated equipment while the equipment is in operation. If a unit does not operate, select "NO" on Equipment Operating Today section. Any units found to be outside of the designated operational limits need prompt reporting and corrective action. All deviations shall include comments on the bottom section of the form. Include a description and corrective actions.

DAY SHIFT READINGS

Supervisor: [signature]

Unit ID	Unit Name (Permit Emission Unit)	Operator Initials	Operating Today?	Time of Reading	Pressure Drop (in. W.C.)	
					Reading	Limit
KICE	RECEIVING BAGHOUSE (EUSHIPRECEIVE)	JY	No	-		0.5 - 8
PDT-50415-01 Loadout Bin 410	HULL LOADOUT BAGHOUSE 1 (EUHULLLOADOUT)	JY	Yes	12:38	0.77	0.2 - 5
PDT-50425-01 Loadout Bin 420	HULL LOADOUT BAGHOUSE 2 (EUHULLLOADOUT)	JY	No	-		0.2 - 5
PDT-50850-01	LOADOUT BAGHOUSE (EULOADOUT)	JY	Yes	14:30	0.95	0.2 - 5
PDT-50950-01	INGREDIENTS BAGHOUSE (EUINGREDIENTS)	JY	No	-		0.2 - 5

Any pressure drop reading above the designated limit must be reported to EHS Manager

NIGHT SHIFT READINGS

Supervisor: [signature]

Unit ID	Unit Name (Permit Emission Unit)	Operator Initials	Operating Today?	Time of Reading	Pressure Drop (in. W.C.)	
					Reading	Limit
KICE	RECEIVING BAGHOUSE (EUSHIPRECEIVE)	KJ	NO			0.5 - 8
PDT-50415-01 Loadout Bin 410	HULL LOADOUT BAGHOUSE 1 (EUHULLLOADOUT)	KJ	NO			0.2 - 5
PDT-50425-01 Loadout Bin 420	HULL LOADOUT BAGHOUSE 2 (EUHULLLOADOUT)	KJ	NO			0.2 - 5
PDT-50850-01	LOADOUT BAGHOUSE (EULOADOUT)	KJ	Yes	0137	0.89	0.2 - 5
PDT-50950-01	INGREDIENTS BAGHOUSE (EUINGREDIENTS)	KJ	NO			0.2 - 5

Any pressure drop reading above the designated limit must be reported to EHS Manager

Comments/Corrective Actions:

DAILY DIFFERENTIAL PRESSURE READINGS
SHIPPING/RECEIVING

Date: 2-14-22

All values must be taken from associated equipment while the equipment is in operation. If a unit does not operate, sele "NO" on Equipment Operating Today section. Any units found to be outside of the designated operational limits need prompt reporting and corrective action. All deviations shall include comments on the bottom section of the form. Include a description and corrective actions.

DAY SHIFT READINGS

Supervisor: Brian Pittard

Unit ID	Unit Name (Permit Emission Unit)	Operator Initials	Operating Today?	Time of Reading	Pressure Drop (in. W.C.)	
					Reading	Limit
KICE	RECEIVING BAGHOUSE (EUSHIPRECEIVE)	JO	Yes	0725	4.22	0.5 - 8
PDT-50415-01 Loadout Bin 410	HULL LOADOUT BAGHOUSE 1 (EUHULLLOADOUT)	JO	Yes	0725	0.75	0.2 - 5
PDT-50425-01 Loadout Bin 420	HULL LOADOUT BAGHOUSE 2 (EUHULLLOADOUT)	JO	NO			0.2 - 5
PDT-50850-01	LOADOUT BAGHOUSE (EULOADOUT)	JO	Yes	0725	1.06	0.2 - 5
PDT-50950-01	INGREDIENTS BAGHOUSE (EUINGREDIENTS)	JO	NO			0.2 - 5

Any pressure drop reading above the designated limit must be reported to EHS Manager

NIGHT SHIFT READINGS

Supervisor: Tyler Allen

Unit ID	Unit Name (Permit Emission Unit)	Operator Initials	Operating Today?	Time of Reading	Pressure Drop (in. W.C.)	
					Reading	Limit
KICE	RECEIVING BAGHOUSE (EUSHIPRECEIVE)	KJ	Yes	2307	3.99	0.5 - 8
PDT-50415-01 Loadout Bin 410	HULL LOADOUT BAGHOUSE 1 (EUHULLLOADOUT)	KJ	NO			0.2 - 5
PDT-50425-01 Loadout Bin 420	HULL LOADOUT BAGHOUSE 2 (EUHULLLOADOUT)	KJ	NO			0.2 - 5
PDT-50850-01	LOADOUT BAGHOUSE (EULOADOUT)	KJ	Yes	2307	0.74	0.2 - 5
PDT-50950-01	INGREDIENTS BAGHOUSE (EUINGREDIENTS)	KJ	NO			0.2 - 5

Any pressure drop reading above the designated limit must be reported to EHS Manager

Comments/Corrective Actions:

DAILY DIFFERENTIAL PRESSURE READINGS
SHIPPING/RECEIVING

Date: 2-15-22

All values must be taken from associated equipment while the equipment is in operation. If a unit does not operate, sele... "NO" on Equipment Operating Today section. Any units found to be outside of the designated operational limits need prompt reporting and corrective action. All deviations shall include comments on the bottom section of the form. Include a description and corrective actions.

DAY SHIFT READINGS

Supervisor: [signature]

Unit ID	Unit Name (Permit Emission Unit)	Operator Initials	Operating Today?	Time of Reading	Pressure Drop (in. W.C.)	
					Reading	Limit
KICE	RECEIVING BAGHOUSE (EUSHIPRECEIVE)	BP	yes	07:40	4.07	0.5 - 8
PDT-50415-01 Loadout Bin 410	HULL LOADOUT BAGHOUSE 1 (EUHULLLOADOUT)	BP	yes	08:00	0.76	0.2 - 5
PDT-50425-01 Loadout Bin 420	HULL LOADOUT BAGHOUSE 2 (EUHULLLOADOUT)	BP	NO			0.2 - 5
PDT-50850-01	LOADOUT BAGHOUSE (EULOADOUT)	BP	yes	07:40	1.10	0.2 - 5
PDT-50950-01	INGREDIENTS BAGHOUSE (EUINGREDIENTS)	BP	NO			0.2 - 5

Any pressure drop reading above the designated limit must be reported to EHS Manager

NIGHT SHIFT READINGS

Supervisor: [signature]

Unit ID	Unit Name (Permit Emission Unit)	Operator Initials	Operating Today?	Time of Reading	Pressure Drop (in. W.C.)	
					Reading	Limit
KICE	RECEIVING BAGHOUSE (EUSHIPRECEIVE)	KJ	Yes	0106	4.23	0.5 - 8
PDT-50415-01 Loadout Bin 410	HULL LOADOUT BAGHOUSE 1 (EUHULLLOADOUT)	KJ	Yes ~~No~~ KJ	0106	0.63	0.2 - 5
PDT-50425-01 Loadout Bin 420	HULL LOADOUT BAGHOUSE 2 (EUHULLLOADOUT)	KJ	no			0.2 - 5
PDT-50850-01	LOADOUT BAGHOUSE (EULOADOUT)	KJ	Yes	0106	0.69	0.2 - 5
PDT-50950-01	INGREDIENTS BAGHOUSE (EUINGREDIENTS)	KJ	no			0.2 - 5

Any pressure drop reading above the designated limit must be reported to EHS Manager

Comments/Corrective Actions:

DAILY DIFFERENTIAL PRESSURE READINGS
SHIPPING/RECEIVING

Date: 2-16-22

All values must be taken from associated equipment while the equipment is in operation. If a unit does not operate, select "NO" on Equipment Operating Today section. Any units found to be outside of the designated operational limits need prompt reporting and corrective action. All deviations shall include comments on the bottom section of the form. Include a description and corrective actions.

DAY SHIFT READINGS

Supervisor: [signature]

Unit ID	Unit Name (Permit Emission Unit)	Operator Initials	Operating Today?	Time of Reading	Pressure Drop (in. W.C.)	
					Reading	Limit
KICE	RECEIVING BAGHOUSE (EUSHIPRECEIVE)	BP	yes	0802	3.74	0.5 - 8
PDT-50415-01 Loadout Bin 410	HULL LOADOUT BAGHOUSE 1 (EUHULLLOADOUT)	BP	yes	0802	0.83	0.2 - 5
PDT-50425-01 Loadout Bin 420	HULL LOADOUT BAGHOUSE 2 (EUHULLLOADOUT)	BP	NO			0.2 - 5
PDT-50850-01	LOADOUT BAGHOUSE (EULOADOUT)	BP	yes	0802	0.74	0.2 - 5
PDT-50950-01	INGREDIENTS BAGHOUSE (EUINGREDIENTS)	BP	NO			0.2 - 5

Any pressure drop reading above the designated limit must be reported to EHS Manager

NIGHT SHIFT READINGS

Supervisor: [signature]

Unit ID	Unit Name (Permit Emission Unit)	Operator Initials	Operating Today?	Time of Reading	Pressure Drop (in. W.C.)	
					Reading	Limit
KICE	RECEIVING BAGHOUSE (EUSHIPRECEIVE)	KJ	yes	2315	4.12	0.5 - 8
PDT-50415-01 Loadout Bin 410	HULL LOADOUT BAGHOUSE 1 (EUHULLLOADOUT)	KJ	Yes	2315	0.78	0.2 - 5
PDT-50425-01 Loadout Bin 420	HULL LOADOUT BAGHOUSE 2 (EUHULLLOADOUT)	KJ	NO			0.2 - 5
PDT-50850-01	LOADOUT BAGHOUSE (EULOADOUT)	KJ	Yes	0236	1.45	0.2 - 5
PDT-50950-01	INGREDIENTS BAGHOUSE (EUINGREDIENTS)	KJ	NO			0.2 - 5

Any pressure drop reading above the designated limit must be reported to EHS Manager

Comments/Corrective Actions:

DAILY DIFFERENTIAL PRESSURE READINGS
SHIPPING/RECEIVING

Date: 2-17-22

All values must be taken from associated equipment while the equipment is in operation. If a unit does not operate, select "NO" on Equipment Operating Today section. Any units found to be outside of the designated operational limits need prompt reporting and corrective action. All deviations shall include comments on the bottom section of the form. Include a description and corrective actions.

DAY SHIFT READINGS

Supervisor: [signature]

Unit ID	Unit Name (Permit Emission Unit)	Operator Initials	Operating Today?	Time of Reading	Pressure Drop (in. W.C.)	
					Reading	Limit
KICE	RECEIVING BAGHOUSE (EUSHIPRECEIVE)	BP	yes	07:02	4,36	0.5 - 8
PDT-50415-01 Loadout Bin 410	HULL LOADOUT BAGHOUSE 1 (EUHULLLOADOUT)	BP	yes	09:30	0.79	0.2 - 5
PDT-50425-01 Loadout Bin 420	HULL LOADOUT BAGHOUSE 2 (EUHULLLOADOUT)	BP	NO			0.2 - 5
PDT-50850-01	LOADOUT BAGHOUSE (EULOADOUT)	BP	yes	07:02	1.19	0.2 - 5
PDT-50950-01	INGREDIENTS BAGHOUSE (EUINGREDIENTS)	BP	NO			0.2 - 5

Any pressure drop reading above the designated limit must be reported to EHS Manager

NIGHT SHIFT READINGS

Supervisor: [signature]

Unit ID	Unit Name (Permit Emission Unit)	Operator Initials	Operating Today?	Time of Reading	Pressure Drop (in. W.C.)	
					Reading	Limit
KICE	RECEIVING BAGHOUSE (EUSHIPRECEIVE)	MS	YES	1712	3.86	0.5 - 8
PDT-50415-01 Loadout Bin 410	HULL LOADOUT BAGHOUSE 1 (EUHULLLOADOUT)	MS	YES	1712	0.76	0.2 - 5
PDT-50425-01 Loadout Bin 420	HULL LOADOUT BAGHOUSE 2 (EUHULLLOADOUT)	MS	NO			0.2 - 5
PDT-50850-01	LOADOUT BAGHOUSE (EULOADOUT)	MS	YES	1712	1,14	0.2 - 5
PDT-50950-01	INGREDIENTS BAGHOUSE (EUINGREDIENTS)	MS	NO			0.2 - 5

Any pressure drop reading above the designated limit must be reported to EHS Manager

Comments/Corrective Actions:

DAILY DIFFERENTIAL PRESSURE READINGS
SHIPPING/RECEIVING

Date: 2-18-22

All values must be taken from associated equipment while the equipment is in operation. If a unit does not operate, select "NO" on Equipment Operating Today section. Any units found to be outside of the designated operational limits need prompt reporting and corrective action. All deviations shall include comments on the bottom section of the form. Include a description and corrective actions.

DAY SHIFT READINGS

Supervisor: [signature]

Unit ID	Unit Name (Permit Emission Unit)	Operator Initials	Operating Today?	Time of Reading	Pressure Drop (in. W.C.)	
					Reading	Limit
KICE	RECEIVING BAGHOUSE (EUSHIPRECEIVE)	BP	yes	07:40	3.95	0.5 - 8
PDT-50415-01 Loadout Bin 410	HULL LOADOUT BAGHOUSE 1 (EUHULLLOADOUT)	BP	yes	07:40	0.74	0.2 - 5
PDT-50425-01 Loadout Bin 420	HULL LOADOUT BAGHOUSE 2 (EUHULLLOADOUT)	BP	NO			0.2 - 5
PDT-50850-01	LOADOUT BAGHOUSE (EULOADOUT)	BP	yes	07:40	0.92	0.2 - 5
PDT-50950-01	INGREDIENTS BAGHOUSE (EUINGREDIENTS)	BP	NO			0.2 - 5

Any pressure drop reading above the designated limit must be reported to EHS Manager

NIGHT SHIFT READINGS

Supervisor: [signature]

Unit ID	Unit Name (Permit Emission Unit)	Operator Initials	Operating Today?	Time of Reading	Pressure Drop (in. W.C.)	
					Reading	Limit
KICE	RECEIVING BAGHOUSE (EUSHIPRECEIVE)	JS	NO			0.5 - 8
PDT-50415-01 Loadout Bin 410	HULL LOADOUT BAGHOUSE 1 (EUHULLLOADOUT)	JS	NO			0.2 - 5
PDT-50425-01 Loadout Bin 420	HULL LOADOUT BAGHOUSE 2 (EUHULLLOADOUT)	JS	NO			0.2 - 5
PDT-50850-01	LOADOUT BAGHOUSE (EULOADOUT)	JS	Yes	0410	1.01	0.2 - 5
PDT-50950-01	INGREDIENTS BAGHOUSE (EUINGREDIENTS)	JS	NO			0.2 - 5

Any pressure drop reading above the designated limit must be reported to EHS Manager

Comments/Corrective Actions:

DAILY DIFFERENTIAL PRESSURE READINGS
SHIPPING/RECEIVING

Date: 2-19-22

All values must be taken from associated equipment while the equipment is in operation. If a unit does not operate, select "NO" on Equipment Operating Today section. Any units found to be outside of the designated operational limits need prompt reporting and corrective action. All deviations shall include comments on the bottom section of the form. Include a description and corrective actions.

DAY SHIFT READINGS

Supervisor: [signature]

Unit ID	Unit Name (Permit Emission Unit)	Operator Initials	Operating Today?	Time of Reading	Pressure Drop (in. W.C.)	
					Reading	Limit
KICE	RECEIVING BAGHOUSE (EUSHIPRECEIVE)	RS	NO	~~RS~~ RS		0.5 - 8
PDT-50415-01 Loadout Bin 410	HULL LOADOUT BAGHOUSE 1 (EUHULLLOADOUT)	RS	NO			0.2 - 5
PDT-50425-01 Loadout Bin 420	HULL LOADOUT BAGHOUSE 2 (EUHULLLOADOUT)	RS	NO			0.2 - 5
PDT-50850-01	LOADOUT BAGHOUSE (EULOADOUT)	RS	YeS	10:35	1.02	0.2 - 5
PDT-50950-01	INGREDIENTS BAGHOUSE (EUINGREDIENTS)	RS	NO			0.2 - 5

Any pressure drop reading above the designated limit must be reported to EHS Manager

NIGHT SHIFT READINGS

Supervisor: [signature]

Unit ID	Unit Name (Permit Emission Unit)	Operator Initials	Operating Today?	Time of Reading	Pressure Drop (in. W.C.)	
					Reading	Limit
KICE	RECEIVING BAGHOUSE (EUSHIPRECEIVE)	NG	NO			0.5 - 8
PDT-50415-01 Loadout Bin 410	HULL LOADOUT BAGHOUSE 1 (EUHULLLOADOUT)	NG	YeS	1945	0.69	0.2 - 5
PDT-50425-01 Loadout Bin 420	HULL LOADOUT BAGHOUSE 2 (EUHULLLOADOUT)	NG	NO			0.2 - 5
PDT-50850-01	LOADOUT BAGHOUSE (EULOADOUT)	NG	YeS	1945	0.73	0.2 - 5
PDT-50950-01	INGREDIENTS BAGHOUSE (EUINGREDIENTS)	NG	NO			0.2 - 5

Any pressure drop reading above the designated limit must be reported to EHS Manager

Comments/Corrective Actions:

DAILY DIFFERENTIAL PRESSURE READINGS
SHIPPING/RECEIVING

Date: 2-20-22

All values must be taken from associated equipment while the equipment is in operation. If a unit does not operate, select "NO" on Equipment Operating Today section. Any units found to be outside of the designated operational limits need prompt reporting and corrective action. All deviations shall include comments on the bottom section of the form. Include a description and corrective actions.

DAY SHIFT READINGS

Supervisor: _____

Unit ID	Unit Name (Permit Emission Unit)	Operator Initials	Operating Today?	Time of Reading	Pressure Drop (in. W.C.)	
					Reading	Limit
KICE	RECEIVING BAGHOUSE (EUSHIPRECEIVE)	RS	NO			0.5 - 8
PDT-50415-01 Loadout Bin 410	HULL LOADOUT BAGHOUSE 1 (EUHULLLOADOUT)	RS	Yes	0900	0.81	0.2 - 5
PDT-50425-01 Loadout Bin 420	HULL LOADOUT BAGHOUSE 2 (EUHULLLOADOUT)	RS	NO			0.2 - 5
PDT-50850-01	LOADOUT BAGHOUSE (EULOADOUT)	RS	NO			0.2 - 5
PDT-50950-01	INGREDIENTS BAGHOUSE (EUINGREDIENTS)	RS	NO			0.2 - 5

Any pressure drop reading above the designated limit must be reported to EHS Manager

NIGHT SHIFT READINGS

Supervisor: _____

Unit ID	Unit Name (Permit Emission Unit)	Operator Initials	Operating Today?	Time of Reading	Pressure Drop (in. W.C.)	
					Reading	Limit
KICE	RECEIVING BAGHOUSE (EUSHIPRECEIVE)	NG	NO			0.5 - 8
PDT-50415-01 Loadout Bin 410	HULL LOADOUT BAGHOUSE 1 (EUHULLLOADOUT)	NG	NO			0.2 - 5
PDT-50425-01 Loadout Bin 420	HULL LOADOUT BAGHOUSE 2 (EUHULLLOADOUT)	NG	NO			0.2 - 5
PDT-50850-01	LOADOUT BAGHOUSE (EULOADOUT)	NG	NO			0.2 - 5
PDT-50950-01	INGREDIENTS BAGHOUSE (EUINGREDIENTS)	NG	NO			0.2 - 5

Any pressure drop reading above the designated limit must be reported to EHS Manager

Comments/Corrective Actions: _____

DAILY DIFFERENTIAL PRESSURE READINGS
SHIPPING/RECEIVING

Date: 2-21-22

All values must be taken from associated equipment while the equipment is in operation. If a unit does not operate, select "NO" on Equipment Operating Today section. Any units found to be outside of the designated operational limits need prompt reporting and corrective action. All deviations shall include comments on the bottom section of the form. Include a description and corrective actions.

DAY SHIFT READINGS

Supervisor: [signature]

Unit ID	Unit Name (Permit Emission Unit)	Operator Initials	Operating Today?	Time of Reading	Pressure Drop (in. W.C.)	
					Reading	Limit
KICE	RECEIVING BAGHOUSE (EUSHIPRECEIVE)	BP	yes	09:55	4.08	0.5 - 8
PDT-50415-01 Loadout Bin 410	HULL LOADOUT BAGHOUSE 1 (EUHULLLOADOUT)	BP	yes	09:55	0.81	0.2 - 5
PDT-50425-01 Loadout Bin 420	HULL LOADOUT BAGHOUSE 2 (EUHULLLOADOUT)	BP	NO			0.2 - 5
PDT-50850-01	LOADOUT BAGHOUSE (EULOADOUT)	BP	yes	09:55	1.15	0.2 - 5
PDT-50950-01	INGREDIENTS BAGHOUSE (EUINGREDIENTS)	BP	NO			0.2 - 5

Any pressure drop reading above the designated limit must be reported to EHS Manager

NIGHT SHIFT READINGS

Supervisor: [signature]

Unit ID	Unit Name (Permit Emission Unit)	Operator Initials	Operating Today?	Time of Reading	Pressure Drop (in. W.C.)	
					Reading	Limit
KICE	RECEIVING BAGHOUSE (EUSHIPRECEIVE)	KJ	no			0.5 - 8
PDT-50415-01 Loadout Bin 410	HULL LOADOUT BAGHOUSE 1 (EUHULLLOADOUT)	KJ	no			0.2 - 5
PDT-50425-01 Loadout Bin 420	HULL LOADOUT BAGHOUSE 2 (EUHULLLOADOUT)	KJ	no			0.2 - 5
PDT-50850-01	LOADOUT BAGHOUSE (EULOADOUT)	KJ	Yes	2213	1.42	0.2 - 5
PDT-50950-01	INGREDIENTS BAGHOUSE (EUINGREDIENTS)	KJ	no			0.2 - 5

Any pressure drop reading above the designated limit must be reported to EHS Manager

Comments/Corrective Actions:

DAILY DIFFERENTIAL PRESSURE READINGS
SHIPPING/RECEIVING

Date: 2-22-22

All values must be taken from associated equipment while the equipment is in operation. If a unit does not operate, select "NO" on Equipment Operating Today section. Any units found to be outside of the designated operational limits need prompt reporting and corrective action. All deviations shall include comments on the bottom section of the form. Include a description and corrective actions.

DAY SHIFT READINGS

Supervisor: [signature]

Unit ID	Unit Name (Permit Emission Unit)	Operator Initials	Operating Today?	Time of Reading	Pressure Drop (in. W.C.)	
					Reading	Limit
KICE	RECEIVING BAGHOUSE (EUSHIPRECEIVE)	BP	yes	07:00	4:32	0.5 - 8
PDT-50415-01 Loadout Bin 410	HULL LOADOUT BAGHOUSE 1 (EUHULLLOADOUT)	BP	yes	07:50	0.90	0.2 - 5
PDT-50425-01 Loadout Bin 420	HULL LOADOUT BAGHOUSE 2 (EUHULLLOADOUT)	BP	NO			0.2 - 5
PDT-50850-01	LOADOUT BAGHOUSE (EULOADOUT)	BP	yes	06:52	1.42	0.2 - 5
PDT-50950-01	INGREDIENTS BAGHOUSE (EUINGREDIENTS)	BP	NO			0.2 - 5

Any pressure drop reading above the designated limit must be reported to EHS Manager

NIGHT SHIFT READINGS

Supervisor: [signature]

Unit ID	Unit Name (Permit Emission Unit)	Operator Initials	Operating Today?	Time of Reading	Pressure Drop (in. W.C.)	
					Reading	Limit
KICE	RECEIVING BAGHOUSE (EUSHIPRECEIVE)	MS	Yes	1927	4,18	0.5 - 8
PDT-50415-01 Loadout Bin 410	HULL LOADOUT BAGHOUSE 1 (EUHULLLOADOUT)	MS	yes	1927 ~~(7+83 MS 2-2-22~~	0.89	0.2 - 5
PDT-50425-01 Loadout Bin 420	HULL LOADOUT BAGHOUSE 2 (EUHULLLOADOUT)	MS	NO			0.2 - 5
PDT-50850-01	LOADOUT BAGHOUSE (EULOADOUT)	MS	yes	1927	1,43	0.2 - 5
PDT-50950-01	INGREDIENTS BAGHOUSE (EUINGREDIENTS)	MS	NO			0.2 - 5

Any pressure drop reading above the designated limit must be reported to EHS Manager

Comments/Corrective Actions:

DAILY DIFFERENTIAL PRESSURE READINGS
SHIPPING/RECEIVING

Date: 2-23-22

All values must be taken from associated equipment while the equipment is in operation. If a unit does not operate, select "NO" on Equipment Operating Today section. Any units found to be outside of the designated operational limits need prompt reporting and corrective action. All deviations shall include comments on the bottom section of the form. Include a description and corrective actions.

DAY SHIFT READINGS

Supervisor: [signature]

Unit ID	Unit Name (Permit Emission Unit)	Operator Initials	Operating Today?	Time of Reading	Pressure Drop (in. W.C.)	
					Reading	Limit
KICE	RECEIVING BAGHOUSE (EUSHIPRECEIVE)	BP	yes	07:00	4.62	0.5 - 8
PDT-50415-01 Loadout Bin 410	HULL LOADOUT BAGHOUSE 1 (EUHULLLOADOUT)	BP	yes	11:30	0.84	0.2 - 5
PDT-50425-01 Loadout Bin 420	HULL LOADOUT BAGHOUSE 2 (EUHULLLOADOUT)	BP	NO			0.2 - 5
PDT-50850-01	LOADOUT BAGHOUSE (EULOADOUT)	BP	yes	07:00	1.13	0.2 - 5
PDT-50950-01	INGREDIENTS BAGHOUSE (EUINGREDIENTS)	BP	NO			0.2 - 5

Any pressure drop reading above the designated limit must be reported to EHS Manager

NIGHT SHIFT READINGS

Supervisor: [signature]

Unit ID	Unit Name (Permit Emission Unit)	Operator Initials	Operating Today?	Time of Reading	Pressure Drop (in. W.C.)	
					Reading	Limit
KICE	RECEIVING BAGHOUSE (EUSHIPRECEIVE)	JS	NO			0.5 - 8
PDT-50415-01 Loadout Bin 410	HULL LOADOUT BAGHOUSE 1 (EUHULLLOADOUT)	JS	Yes	1945	0.83	0.2 - 5
PDT-50425-01 Loadout Bin 420	HULL LOADOUT BAGHOUSE 2 (EUHULLLOADOUT)	JS	NO			0.2 - 5
PDT-50850-01	LOADOUT BAGHOUSE (EULOADOUT)	JS	Yes	1945	0.73	0.2 - 5
PDT-50950-01	INGREDIENTS BAGHOUSE (EUINGREDIENTS)	JS	NO			0.2 - 5

Any pressure drop reading above the designated limit must be reported to EHS Manager

Comments/Corrective Actions:

DAILY DIFFERENTIAL PRESSURE READINGS
SHIPPING/RECEIVING

Date: 2-24-22

All values must be taken from associated equipment while the equipment is in operation. If a unit does not operate, select "NO" on Equipment Operating Today section. Any units found to be outside of the designated operational limits need prompt reporting and corrective action. All deviations shall include comments on the bottom section of the form. Include a description and corrective actions.

DAY SHIFT READINGS

Supervisor: [signature]

Unit ID	Unit Name (Permit Emission Unit)	Operator Initials	Operating Today?	Time of Reading	Pressure Drop (in. W.C.)	
					Reading	Limit
KICE	RECEIVING BAGHOUSE (EUSHIPRECEIVE)	BP	yes	07:30	3.89	0.5 - 8
PDT-50415-01 Loadout Bin 410	HULL LOADOUT BAGHOUSE 1 (EUHULLLOADOUT)	BP	yes	07:40	0.76	0.2 - 5
PDT-50425-01 Loadout Bin 420	HULL LOADOUT BAGHOUSE 2 (EUHULLLOADOUT)	BP	NO			0.2 - 5
PDT-50850-01	LOADOUT BAGHOUSE (EULOADOUT)	BP	yes	07:30	0.69	0.2 - 5
PDT-50950-01	INGREDIENTS BAGHOUSE (EUINGREDIENTS)	BP	NO			0.2 - 5

Any pressure drop reading above the designated limit must be reported to EHS Manager

NIGHT SHIFT READINGS

Supervisor: [signature]

Unit ID	Unit Name (Permit Emission Unit)	Operator Initials	Operating Today?	Time of Reading	Pressure Drop (in. W.C.)	
					Reading	Limit
KICE	RECEIVING BAGHOUSE (EUSHIPRECEIVE)	GL.	NO			0.5 - 8
PDT-50415-01 Loadout Bin 410	HULL LOADOUT BAGHOUSE 1 (EUHULLLOADOUT)	GL.	Yes	0220	0.78	0.2 - 5
PDT-50425-01 Loadout Bin 420	HULL LOADOUT BAGHOUSE 2 (EUHULLLOADOUT)	GL.	NO			0.2 - 5
PDT-50850-01	LOADOUT BAGHOUSE (EULOADOUT)	GL.	YES	0220	0.95	0.2 - 5
PDT-50950-01	INGREDIENTS BAGHOUSE (EUINGREDIENTS)	GL.	NO			0.2 - 5

Any pressure drop reading above the designated limit must be reported to EHS Manager

Comments/Corrective Actions:

DAILY DIFFERENTIAL PRESSURE READINGS
SHIPPING/RECEIVING

Date: 2-25-22

All values must be taken from associated equipment while the equipment is in operation. If a unit does not operate, select "NO" on Equipment Operating Today section. Any units found to be outside of the designated operational limits need prompt reporting and corrective action. All deviations shall include comments on the bottom section of the form. Include a description and corrective actions.

DAY SHIFT READINGS

Supervisor: Richard Clark

Unit ID	Unit Name (Permit Emission Unit)	Operator Initials	Operating Today?	Time of Reading	Pressure Drop (in. W.C.)	
					Reading	Limit
KICE	RECEIVING BAGHOUSE (EUSHIPRECEIVE)	BP	yes	07:30	3.89	0.5 - 8
PDT-50415-01 Loadout Bin 410	HULL LOADOUT BAGHOUSE 1 (EUHULLLOADOUT)	BP	yes	07:30	0.76	0.2 - 5
PDT-50425-01 Loadout Bin 420	HULL LOADOUT BAGHOUSE 2 (EUHULLLOADOUT)	BP	NO			0.2 - 5
PDT-50850-01	LOADOUT BAGHOUSE (EULOADOUT)	BP	yes	07:30	0.93	0.2 - 5
PDT-50950-01	INGREDIENTS BAGHOUSE (EUINGREDIENTS)	BP	NO			0.2 - 5

Any pressure drop reading above the designated limit must be reported to EHS Manager

NIGHT SHIFT READINGS

Supervisor: Tyler Clark

Unit ID	Unit Name (Permit Emission Unit)	Operator Initials	Operating Today?	Time of Reading	Pressure Drop (in. W.C.)	
					Reading	Limit
KICE	RECEIVING BAGHOUSE (EUSHIPRECEIVE)	MS	yes	0400	3.55	0.5 - 8
PDT-50415-01 Loadout Bin 410	HULL LOADOUT BAGHOUSE 1 (EUHULLLOADOUT)	MS	NO			0.2 - 5
PDT-50425-01 Loadout Bin 420	HULL LOADOUT BAGHOUSE 2 (EUHULLLOADOUT)	MS	NO			0.2 - 5
PDT-50850-01	LOADOUT BAGHOUSE (EULOADOUT)	MS	yes	0400	0.91	0.2 - 5
PDT-50950-01	INGREDIENTS BAGHOUSE (EUINGREDIENTS)	MS	NO			0.2 - 5

Any pressure drop reading above the designated limit must be reported to EHS Manager

Comments/Corrective Actions:

DAILY DIFFERENTIAL PRESSURE READINGS
SHIPPING/RECEIVING

Date: 2-26-22

All values must be taken from associated equipment while the equipment is in operation. If a unit does not operate, select "NO" on Equipment Operating Today section. Any units found to be outside of the designated operational limits need prompt reporting and corrective action. All deviations shall include comments on the bottom section of the form. Include a description and corrective actions.

DAY SHIFT READINGS

Supervisor: [signature]

Unit ID	Unit Name (Permit Emission Unit)	Operator Initials	Operating Today?	Time of Reading	Pressure Drop (in. W.C.)	
					Reading	Limit
KICE	RECEIVING BAGHOUSE (EUSHIPRECEIVE)	RO	Yes	08:50	1.52	0.5 - 8
PDT-50415-01 Loadout Bin 410	HULL LOADOUT BAGHOUSE 1 (EUHULLLOADOUT)	RO	NO	—	—	0.2 - 5
PDT-50425-01 Loadout Bin 420	HULL LOADOUT BAGHOUSE 2 (EUHULLLOADOUT)	RO	NO	—	—	0.2 - 5
PDT-50850-01	LOADOUT BAGHOUSE (EULOADOUT)	RO	Yes	1111 ~~0920~~ BMD	1.03 ~~1.01~~ BMD	0.2 - 5
PDT-50950-01	INGREDIENTS BAGHOUSE (EUINGREDIENTS)	RO	NO	~~8:50~~ Jr	—	0.2 - 5

Any pressure drop reading above the designated limit must be reported to EHS Manager

NIGHT SHIFT READINGS

Supervisor: [signature]

Unit ID	Unit Name (Permit Emission Unit)	Operator Initials	Operating Today?	Time of Reading	Pressure Drop (in. W.C.)	
					Reading	Limit
KICE	RECEIVING BAGHOUSE (EUSHIPRECEIVE)	KH	~~YES~~ BMD NO	~~2130~~ BMD	~~0.06~~ BMD	0.5 - 8
PDT-50415-01 Loadout Bin 410	HULL LOADOUT BAGHOUSE 1 (EUHULLLOADOUT)	KH	NO			0.2 - 5
PDT-50425-01 Loadout Bin 420	HULL LOADOUT BAGHOUSE 2 (EUHULLLOADOUT)	KH	NO			0.2 - 5
PDT-50850-01	LOADOUT BAGHOUSE (EULOADOUT)	KH	Yes	2130	0.55	0.2 - 5
PDT-50950-01	INGREDIENTS BAGHOUSE (EUINGREDIENTS)	KH	NO			0.2 - 5

Any pressure drop reading above the designated limit must be reported to EHS Manager

Comments/Corrective Actions:

- Receiving Baghouse Did Not Run on 2/26/22. for Night Shift.

- Days Loadout Baghouse I grabbed a reading at 0920 then realized they were not Loading out so I grabbed a new Reading to be more accurate. -BMD.

DAILY DIFFERENTIAL PRESSURE READINGS
SHIPPING/RECEIVING

Date: 2-27-22

All values must be taken from associated equipment while the equipment is in operation. If a unit does not operate, select "NO" on Equipment Operating Today section. Any units found to be outside of the designated operational limits need prompt reporting and corrective action. All deviations shall include comments on the bottom section of the form. Include a description and corrective actions.

DAY SHIFT READINGS

Supervisor: [signature]

Unit ID	Unit Name (Permit Emission Unit)	Operator Initials	Operating Today?	Time of Reading	Pressure Drop (in. W.C.)	
					Reading	Limit
KICE	RECEIVING BAGHOUSE (EUSHIPRECEIVE)	JO	NO	—	—	0.5 - 8
PDT-50415-01 Loadout Bin 410	HULL LOADOUT BAGHOUSE 1 (EUHULLLOADOUT)	JO	NO	—	—	0.2 - 5
PDT-50425-01 Loadout Bin 420	HULL LOADOUT BAGHOUSE 2 (EUHULLLOADOUT)	JO	NO	—	—	0.2 - 5
PDT-50850-01	LOADOUT BAGHOUSE (EULOADOUT)	JO	Yes	9:50AM	1.09	0.2 - 5
PDT-50950-01	INGREDIENTS BAGHOUSE (EUINGREDIENTS)	JO	NO	—	—	0.2 - 5

Any pressure drop reading above the designated limit must be reported to EHS Manager

NIGHT SHIFT READINGS

Supervisor: [signature]

Unit ID	Unit Name (Permit Emission Unit)	Operator Initials	Operating Today?	Time of Reading	Pressure Drop (in. W.C.)	
					Reading	Limit
KICE	RECEIVING BAGHOUSE (EUSHIPRECEIVE)	MH	Yes	1935	0.04	0.5 - 8
PDT-50415-01 Loadout Bin 410	HULL LOADOUT BAGHOUSE 1 (EUHULLLOADOUT)	MH	Yes	1935	0.91	0.2 - 5
PDT-50425-01 Loadout Bin 420	HULL LOADOUT BAGHOUSE 2 (EUHULLLOADOUT)	MH	no			0.2 - 5
PDT-50850-01	LOADOUT BAGHOUSE (EULOADOUT)	MH	Yes	1935	0.50	0.2 - 5
PDT-50950-01	INGREDIENTS BAGHOUSE (EUINGREDIENTS)	MH	no			0.2 - 5

Any pressure drop reading above the designated limit must be reported to EHS Manager

Comments/Corrective Actions:

DAILY DIFFERENTIAL PRESSURE READINGS
SHIPPING/RECEIVING

Date: 2-28-22

All values must be taken from associated equipment while the equipment is in operation. If a unit does not operate, select "NO" on Equipment Operating Today section. Any units found to be outside of the designated operational limits need prompt reporting and corrective action. All deviations shall include comments on the bottom section of the form. Include a description and corrective actions.

DAY SHIFT READINGS

Supervisor: [signature]

Unit ID	Unit Name (Permit Emission Unit)	Operator Initials	Operating Today?	Time of Reading	Pressure Drop (in. W.C.)	
					Reading	Limit
KICE	RECEIVING BAGHOUSE (EUSHIPRECEIVE)	BP	yes	07:00	3.77	0.5 - 8
PDT-50415-01 Loadout Bin 410	HULL LOADOUT BAGHOUSE 1 (EUHULLLOADOUT)	BP	yes	08:30	0.79	0.2 - 5
PDT-50425-01 Loadout Bin 420	HULL LOADOUT BAGHOUSE 2 (EUHULLLOADOUT)	BP	NO			0.2 - 5
PDT-50850-01	LOADOUT BAGHOUSE (EULOADOUT)	BP	yes	07:00	0.59	0.2 - 5
PDT-50950-01	INGREDIENTS BAGHOUSE (EUINGREDIENTS)	BP	NO			0.2 - 5

Any pressure drop reading above the designated limit must be reported to EHS Manager

NIGHT SHIFT READINGS

Supervisor: [signature]

Unit ID	Unit Name (Permit Emission Unit)	Operator Initials	Operating Today?	Time of Reading	Pressure Drop (in. W.C.)	
					Reading	Limit
KICE	RECEIVING BAGHOUSE (EUSHIPRECEIVE)	JS	Yes	2230	4.24	0.5 - 8
PDT-50415-01 Loadout Bin 410	HULL LOADOUT BAGHOUSE 1 (EUHULLLOADOUT)	JS	NO			0.2 - 5
PDT-50425-01 Loadout Bin 420	HULL LOADOUT BAGHOUSE 2 (EUHULLLOADOUT)	JS	NO			0.2 - 5
PDT-50850-01	LOADOUT BAGHOUSE (EULOADOUT)	JS	Yes	2230	1.03	0.2 - 5
PDT-50950-01	INGREDIENTS BAGHOUSE (EUINGREDIENTS)	JS	NO			0.2 - 5

Any pressure drop reading above the designated limit must be reported to EHS Manager

Comments/Corrective Actions:

DAILY DIFFERENTIAL PRESSURE READINGS
SHIPPING/RECEIVING

Date: 8.1.21

Any units found to be outside of the designated operational limits need prompt reporting and corrective action.

DAY SHIFT READINGS

Supervisor: [signature]

Unit ID	Unit Name (Permit Emission Unit)	Operator Initials	Operating Today?	Time of Reading	Pressure Drop (in. W.C.)	
					Reading	Limit
KICE	RECEIVING BAGHOUSE (EUSHIPRECEIVE)	T. A	YES / (NO)			0.5 - 8
PDT-50415-01 Loadout Bin 410	HULL LOADOUT BAGHOUSE 1 (EUHULLLOADOUT)	T. A.	(YES) / NO	10:37	0.64	0.2 - 5
PDT-50425-01 Loadout Bin 420	HULL LOADOUT BAGHOUSE 2 (EUHULLLOADOUT)	T. A.	YES / (NO)			0.2 - 5
PDT-50850-01	LOADOUT BAGHOUSE (EULOADOUT)	T.A	(YES) / NO	10:37	1.47	0.2 - 8
PDT-50950-01	INGREDIENTS BAGHOUSE (EUINGREDIENTS)	T.A	YES / (NO)			0.2 - 8

NIGHT SHIFT READINGS

Supervisor: [signature]

Unit ID	Unit Name (Permit Emission Unit)	Operator Initials	Operating Today?	Time of Reading	Pressure Drop (in. W.C.)	
					Reading	Limit
KICE	RECEIVING BAGHOUSE (EUSHIPRECEIVE)	J.Y	YES / (NO)	—	—	0.5 - 8
PDT-50415-01 Loadout Bin 410	HULL LOADOUT BAGHOUSE 1 (EUHULLLOADOUT)	J.Y	YES / (NO)	—	—	0.2 - 5
PDT-50425-01 Loadout Bin 420	HULL LOADOUT BAGHOUSE 2 (EUHULLLOADOUT)	J.Y	YES / (NO)	—	—	0.2 - 5
PDT-50850-01	LOADOUT BAGHOUSE (EULOADOUT)	J.Y	(YES) / NO	19:04	1.23	0.2 - 8
PDT-50950-01	INGREDIENTS BAGHOUSE (EUINGREDIENTS)	J.Y	YES / (NO)	—	—	0.2 - 8

Comments/Corrective Actions:

DAILY DIFFERENTIAL PRESSURE READINGS
SHIPPING/RECEIVING

Date: 3-2-27

Any units found to be outside of the designated operational limits need prompt reporting and corrective action.

DAY SHIFT READINGS

Supervisor: [signature]

Unit ID	Unit Name (Permit Emission Unit)	Operator Initials	Operating Today?	Time of Reading	Pressure Drop (in. W.C.)	
					Reading	Limit
KICE	RECEIVING BAGHOUSE (EUSHIPRECEIVE)	BP	(YES) / NO	1600	3.62	0.5 - 8
PDT-50415-01 Loadout Bin 410	HULL LOADOUT BAGHOUSE 1 (EUHULLLOADOUT)	BP	(YES) / NO	1600	0.72	0.2 - 5
PDT-50425-01 Loadout Bin 420	HULL LOADOUT BAGHOUSE 2 (EUHULLLOADOUT)	BP	YES / (NO)			0.2 - 5
PDT-50850-01	LOADOUT BAGHOUSE (EULOADOUT)	BP	(YES) / NO	1600	1.00	0.2 - 8
PDT-50950-01	INGREDIENTS BAGHOUSE (EUINGREDIENTS)	BP	YES / (NO)			0.2 - 8

NIGHT SHIFT READINGS

Supervisor: [signature]

Unit ID	Unit Name (Permit Emission Unit)	Operator Initials	Operating Today?	Time of Reading	Pressure Drop (in. W.C.)	
					Reading	Limit
KICE	RECEIVING BAGHOUSE (EUSHIPRECEIVE)	JO	YES / (NO)			0.5 - 8
PDT-50415-01 Loadout Bin 410	HULL LOADOUT BAGHOUSE 1 (EUHULLLOADOUT)	JO	(YES) / NO	0230	0.68	0.2 - 5
PDT-50425-01 Loadout Bin 420	HULL LOADOUT BAGHOUSE 2 (EUHULLLOADOUT)	JO	YES / (NO)			0.2 - 5
PDT-50850-01	LOADOUT BAGHOUSE (EULOADOUT)	JO	(YES) / NO	0230	1.23	0.2 - 8
PDT-50950-01	INGREDIENTS BAGHOUSE (EUINGREDIENTS)	JO	YES / (NO)			0.2 - 8

Comments/Corrective Actions:

DAILY DIFFERENTIAL PRESSURE READINGS
SHIPPING/RECEIVING

Date: 8-3-21

Any units found to be outside of the designated operational limits need prompt reporting and corrective action.

DAY SHIFT READINGS

Supervisor: [signature]

Unit ID	Unit Name (Permit Emission Unit)	Operator Initials	Operating Today?	Time of Reading	Pressure Drop (in. W.C.)	
					Reading	Limit
KICE	RECEIVING BAGHOUSE (EUSHIPRECEIVE)	BP	(YES) / NO	10:04	3.75	0.5 - 8
PDT-50415-01 Loadout Bin 410	HULL LOADOUT BAGHOUSE 1 (EUHULLLOADOUT)	BP	(YES) / NO	10:04	0.62	0.2 - 5
PDT-50425-01 Loadout Bin 420	HULL LOADOUT BAGHOUSE 2 (EUHULLLOADOUT)	BP	YES / (NO)			0.2 - 5
PDT-50850-01	LOADOUT BAGHOUSE (EULOADOUT)	BP	(YES) / NO	10:04	1.33	0.2 - 8
PDT-50950-01	INGREDIENTS BAGHOUSE (EUINGREDIENTS)	BP	YES / (NO)			0.2 - 8

NIGHT SHIFT READINGS

Supervisor: [signature]

Unit ID	Unit Name (Permit Emission Unit)	Operator Initials	Operating Today?	Time of Reading	Pressure Drop (in. W.C.)	
					Reading	Limit
KICE	RECEIVING BAGHOUSE (EUSHIPRECEIVE)	JO	(YES) / NO	2150	3.54	0.5 - 8
PDT-50415-01 Loadout Bin 410	HULL LOADOUT BAGHOUSE 1 (EUHULLLOADOUT)	JO	(YES) / NO	2150	0.59	0.2 - 5
PDT-50425-01 Loadout Bin 420	HULL LOADOUT BAGHOUSE 2 (EUHULLLOADOUT)	JO	YES / (NO)			0.2 - 5
PDT-50850-01	LOADOUT BAGHOUSE (EULOADOUT)	JO	(YES) / NO	2150	1.11	0.2 - 8
PDT-50950-01	INGREDIENTS BAGHOUSE (EUINGREDIENTS)	JO	(YES) / (NO)			0.2 - 8

Comments/Corrective Actions:

DAILY DIFFERENTIAL PRESSURE READINGS
SHIPPING/RECEIVING

Date: 8-4-21

Any units found to be outside of the designated operational limits need prompt reporting and corrective action.

DAY SHIFT READINGS

Supervisor: [signature]

Unit ID	Unit Name (Permit Emission Unit)	Operator Initials	Operating Today?	Time of Reading	Pressure Drop (in. W.C.)	
					Reading	Limit
KICE	RECEIVING BAGHOUSE (EUSHIPRECEIVE)	RLO	(YES) / NO	0910	4.03	0.5 - 8
PDT-50415-01 Loadout Bin 410	HULL LOADOUT BAGHOUSE 1 (EUHULLLOADOUT)	RLO	(YES) / NO RLO	1135	0.66	0.2 - 5
PDT-50425-01 Loadout Bin 420	HULL LOADOUT BAGHOUSE 2 (EUHULLLOADOUT)	RLO	YES / (NO)			0.2 - 5
PDT-50850-01	LOADOUT BAGHOUSE (EULOADOUT)	RLO	(YES) / NO	0910	1.36	0.2 - 8
PDT-50950-01	INGREDIENTS BAGHOUSE (EUINGREDIENTS)	RLO	YES / (NO)			0.2 - 8

NIGHT SHIFT READINGS

Supervisor: [signature]

Unit ID	Unit Name (Permit Emission Unit)	Operator Initials	Operating Today?	Time of Reading	Pressure Drop (in. W.C.)	
					Reading	Limit
KICE	RECEIVING BAGHOUSE (EUSHIPRECEIVE)	JO	(YES) / NO	0305	3.33	0.5 - 8
PDT-50415-01 Loadout Bin 410	HULL LOADOUT BAGHOUSE 1 (EUHULLLOADOUT)	JO	(YES) / NO	0305	0.70	0.2 - 5
PDT-50425-01 Loadout Bin 420	HULL LOADOUT BAGHOUSE 2 (EUHULLLOADOUT)	JO	YES / (NO)			0.2 - 5
PDT-50850-01	LOADOUT BAGHOUSE (EULOADOUT)	JO	(YES) / NO	0305	1.40	0.2 - 8
PDT-50950-01	INGREDIENTS BAGHOUSE (EUINGREDIENTS)	JO	YES / (NO)			0.2 - 8

Comments/Corrective Actions:

DAILY DIFFERENTIAL PRESSURE READINGS
SHIPPING/RECEIVING

Date: 8-5-21

Any units found to be outside of the designated operational limits need prompt reporting and corrective action.

DAY SHIFT READINGS

Supervisor: [signature]

Unit ID	Unit Name (Permit Emission Unit)	Operator Initials	Operating Today?	Time of Reading	Pressure Drop (in. W.C.)	
					Reading	Limit
KICE	RECEIVING BAGHOUSE (EUSHIPRECEIVE)	RLO	(YES) / NO	0930	3.71	0.5 - 8
PDT-50415-01 Loadout Bin 410	HULL LOADOUT BAGHOUSE 1 (EUHULLLOADOUT)	RLO	(YES) / NO RLO	1420	0.75	0.2 - 5
PDT-50425-01 Loadout Bin 420	HULL LOADOUT BAGHOUSE 2 (EUHULLLOADOUT)	RLO	YES / (NO)			0.2 - 5
PDT-50850-01	LOADOUT BAGHOUSE (EULOADOUT)	RLO	(YES) / NO	0930	1.48	0.2 - 8
PDT-50950-01	INGREDIENTS BAGHOUSE (EUINGREDIENTS)	RLO	(YES) / NO RLO			0.2 - 8

NIGHT SHIFT READINGS

Supervisor: [signature]

Unit ID	Unit Name (Permit Emission Unit)	Operator Initials	Operating Today?	Time of Reading	Pressure Drop (in. W.C.)	
					Reading	Limit
KICE	RECEIVING BAGHOUSE (EUSHIPRECEIVE)	SO	(YES) / NO	0020	3.76	0.5 - 8
PDT-50415-01 Loadout Bin 410	HULL LOADOUT BAGHOUSE 1 (EUHULLLOADOUT)	SO	(YES) / NO	0020	0.76	0.2 - 5
PDT-50425-01 Loadout Bin 420	HULL LOADOUT BAGHOUSE 2 (EUHULLLOADOUT)	SO	YES / (NO)			0.2 - 5
PDT-50850-01	LOADOUT BAGHOUSE (EULOADOUT)	JM	(YES) / NO	17:00	1.01	0.2 - 8
PDT-50950-01	INGREDIENTS BAGHOUSE (EUINGREDIENTS)	SO	YES / (NO)			0.2 - 8

Comments/Corrective Actions:

DAILY DIFFERENTIAL PRESSURE READINGS
SHIPPING/RECEIVING

Date: 8-6-21

Any units found to be outside of the designated operational limits need prompt reporting and corrective action.

DAY SHIFT READINGS

Supervisor: [signature]

Unit ID	Unit Name (Permit Emission Unit)	Operator Initials	Operating Today?	Time of Reading	Pressure Drop (in. W.C.)	
					Reading	Limit
KICE	RECEIVING BAGHOUSE (EUSHIPRECEIVE)	BP	(YES) / NO	10:19	3.87	0.5 - 8
PDT-50415-01 Loadout Bin 410	HULL LOADOUT BAGHOUSE 1 (EUHULLLOADOUT)	BP	(YES) / NO	10:19	0.71	0.2 - 5
PDT-50425-01 Loadout Bin 420	HULL LOADOUT BAGHOUSE 2 (EUHULLLOADOUT)	BP	YES / (NO)			0.2 - 5
PDT-50850-01	LOADOUT BAGHOUSE (EULOADOUT)	BP	(YES) / NO	10:19	1.47	0.2 - 8
PDT-50950-01	INGREDIENTS BAGHOUSE (EUINGREDIENTS)	BP	YES / (NO)			0.2 - 8

NIGHT SHIFT READINGS

Supervisor: [signature]

Unit ID	Unit Name (Permit Emission Unit)	Operator Initials	Operating Today?	Time of Reading	Pressure Drop (in. W.C.)	
					Reading	Limit
KICE	RECEIVING BAGHOUSE (EUSHIPRECEIVE)	JO	YES / (NO)			0.5 - 8
PDT-50415-01 Loadout Bin 410	HULL LOADOUT BAGHOUSE 1 (EUHULLLOADOUT)	JV	(YES) / NO	17:30 JV ~~0.69~~	0.69	0.2 - 5
PDT-50425-01 Loadout Bin 420	HULL LOADOUT BAGHOUSE 2 (EUHULLLOADOUT)	JO	YES / (NO)			0.2 - 5
PDT-50850-01	LOADOUT BAGHOUSE (EULOADOUT)	JO	(YES) / NO	2220	1.46	0.2 - 8
PDT-50950-01	INGREDIENTS BAGHOUSE (EUINGREDIENTS)	JO	YES / (NO)			0.2 - 8

Comments/Corrective Actions:

DAILY DIFFERENTIAL PRESSURE READINGS
SHIPPING/RECEIVING

Date: 8/7/21

Any units found to be outside of the designated operational limits need prompt reporting and corrective action.

DAY SHIFT READINGS

Supervisor: Jared Horn

Unit ID	Unit Name (Permit Emission Unit)	Operator Initials	Operating Today?	Time of Reading	Pressure Drop (in. W.C.)	
					Reading	Limit
KICE	RECEIVING BAGHOUSE (EUSHIPRECEIVE)	RS	YES / (NO)			0.5 - 8
PDT-50415-01 Loadout Bin 410	HULL LOADOUT BAGHOUSE 1 (EUHULLLOADOUT)	RS	(YES) / NO	13:15	0.82	0.2 - 5
PDT-50425-01 Loadout Bin 420	HULL LOADOUT BAGHOUSE 2 (EUHULLLOADOUT)	RS	YES / (NO)			0.2 - 5
PDT-50850-01	LOADOUT BAGHOUSE (EULOADOUT)	RS	(YES) / NO	13:15	1.54	0.2 - 8
PDT-50950-01	INGREDIENTS BAGHOUSE (EUINGREDIENTS)	RS	YES / (NO)			0.2 - 8

NIGHT SHIFT READINGS

Supervisor: [illegible]

Unit ID	Unit Name (Permit Emission Unit)	Operator Initials	Operating Today?	Time of Reading	Pressure Drop (in. W.C.)	
					Reading	Limit
KICE	RECEIVING BAGHOUSE (EUSHIPRECEIVE)	JV	YES / (NO)			0.5 - 8
PDT-50415-01 Loadout Bin 410	HULL LOADOUT BAGHOUSE 1 (EUHULLLOADOUT)	JV	(YES) / NO	22:00	0.78	0.2 - 5
PDT-50425-01 Loadout Bin 420	HULL LOADOUT BAGHOUSE 2 (EUHULLLOADOUT)	JV	YES / (NO)			0.2 - 5
PDT-50850-01	LOADOUT BAGHOUSE (EULOADOUT)	JV	(YES) / NO	22:00	1.61	0.2 - 8
PDT-50950-01	INGREDIENTS BAGHOUSE (EUINGREDIENTS)	JV	YES / (NO)			0.2 - 8

Comments/Corrective Actions:

DAILY DIFFERENTIAL PRESSURE READINGS
SHIPPING/RECEIVING

Date: 8/8/21

Any units found to be outside of the designated operational limits need prompt reporting and corrective action.

DAY SHIFT READINGS

Supervisor: Jared Horn

Unit ID	Unit Name (Permit Emission Unit)	Operator Initials	Operating Today?	Time of Reading	Pressure Drop (in. W.C.)	
					Reading	Limit
KICE	RECEIVING BAGHOUSE (EUSHIPRECEIVE)	RS	YES / (NO)			0.5 - 8
PDT-50415-01 Loadout Bin 410	HULL LOADOUT BAGHOUSE 1 (EUHULLLOADOUT)	RS	(YES) / NO	13:30	0.62	0.2 - 5
PDT-50425-01 Loadout Bin 420	HULL LOADOUT BAGHOUSE 2 (EUHULLLOADOUT)	RS	YES (NO)			0.2 - 5
PDT-50850-01	LOADOUT BAGHOUSE (EULOADOUT)	RS	(YES) / NO	13:30	1.20	0.2 - 8
PDT-50950-01	INGREDIENTS BAGHOUSE (EUINGREDIENTS)	RS	(YES) / NO	13:30	0.38	0.2 - 8

NIGHT SHIFT READINGS

Supervisor: [illegible]

Unit ID	Unit Name (Permit Emission Unit)	Operator Initials	Operating Today?	Time of Reading	Pressure Drop (in. W.C.)	
					Reading	Limit
KICE	RECEIVING BAGHOUSE (EUSHIPRECEIVE)	JV	(YES) / NO	01:00	3.74	0.5 - 8
PDT-50415-01 Loadout Bin 410	HULL LOADOUT BAGHOUSE 1 (EUHULLLOADOUT)	JV	(YES) / NO	01:00	0.64	0.2 - 5
PDT-50425-01 Loadout Bin 420	HULL LOADOUT BAGHOUSE 2 (EUHULLLOADOUT)	JV	YES / (NO)			0.2 - 5
PDT-50850-01	LOADOUT BAGHOUSE (EULOADOUT)	JV	(YES) / NO	01:00	1.41	0.2 - 8
PDT-50950-01	INGREDIENTS BAGHOUSE (EUINGREDIENTS)	JV	YES / (NO)			0.2 - 8

Comments/Corrective Actions:

DAILY DIFFERENTIAL PRESSURE READINGS
SHIPPING/RECEIVING

Date: 8-9-21

Any units found to be outside of the designated operational limits need prompt reporting and corrective action.

DAY SHIFT READINGS

Supervisor: [signature]

Unit ID	Unit Name (Permit Emission Unit)	Operator Initials	Operating Today?	Time of Reading	Pressure Drop (in. W.C.)	
					Reading	Limit
KICE	RECEIVING BAGHOUSE (EUSHIPRECEIVE)	BP	(YES) / NO	08:28	3.65	0.5 - 8
PDT-50415-01 Loadout Bin 410	HULL LOADOUT BAGHOUSE 1 (EUHULLLOADOUT)	BP	(YES) / NO	08:28	0.77	0.2 - 5
PDT-50425-01 Loadout Bin 420	HULL LOADOUT BAGHOUSE 2 (EUHULLLOADOUT)	BP	YES / (NO)			0.2 - 5
PDT-50850-01	LOADOUT BAGHOUSE (EULOADOUT)	BP	(YES) / NO	08:28	0.61	0.2 - 8
PDT-50950-01	INGREDIENTS BAGHOUSE (EUINGREDIENTS)	BP	YES / (NO)			0.2 - 8

NIGHT SHIFT READINGS

Supervisor: [signature]

Unit ID	Unit Name (Permit Emission Unit)	Operator Initials	Operating Today?	Time of Reading	Pressure Drop (in. W.C.)	
					Reading	Limit
KICE	RECEIVING BAGHOUSE (EUSHIPRECEIVE)	JM	(YES) / NO	17:23	3.70	0.5 - 8
PDT-50415-01 Loadout Bin 410	HULL LOADOUT BAGHOUSE 1 (EUHULLLOADOUT)	JM	(YES) / NO	23:30	0.83	0.2 - 5
PDT-50425-01 Loadout Bin 420	HULL LOADOUT BAGHOUSE 2 (EUHULLLOADOUT)	JM	YES / (NO)			0.2 - 5
PDT-50850-01	LOADOUT BAGHOUSE (EULOADOUT)	JM	(YES) / NO	19:05	1.39	0.2 - 8
PDT-50950-01	INGREDIENTS BAGHOUSE (EUINGREDIENTS)	JM	YES / (NO)			0.2 - 8

Comments/Corrective Actions:

DAILY DIFFERENTIAL PRESSURE READINGS
SHIPPING/RECEIVING

Date: 8-10-21

Any units found to be outside of the designated operational limits need prompt reporting and corrective action.

DAY SHIFT READINGS

Supervisor: Tyler Allen

Unit ID	Unit Name (Permit Emission Unit)	Operator Initials	Operating Today?	Time of Reading	Pressure Drop (in. W.C.)	
					Reading	Limit
KICE	RECEIVING BAGHOUSE (EUSHIPRECEIVE)	RLD	(YES) / NO	1620	3,45	0.5 - 8
PDT-50415-01 Loadout Bin 410	HULL LOADOUT BAGHOUSE 1 (EUHULLLOADOUT)	RLD	(YES) / NO	1620	0,63	0.2 - 5
PDT-50425-01 Loadout Bin 420	HULL LOADOUT BAGHOUSE 2 (EUHULLLOADOUT)	RLD	YES / (NO)	1620		0.2 - 5
PDT-50850-01	LOADOUT BAGHOUSE (EULOADOUT)	RLD	(YES) / NO	1620	1,14	0.2 - 8
PDT-50950-01	INGREDIENTS BAGHOUSE (EUINGREDIENTS)	RLD	YES / (NO)	1620	~~RLD~~	0.2 - 8

NIGHT SHIFT READINGS

Supervisor: Zoya Zemskova

Unit ID	Unit Name (Permit Emission Unit)	Operator Initials	Operating Today?	Time of Reading	Pressure Drop (in. W.C.)	
					Reading	Limit
KICE	RECEIVING BAGHOUSE (EUSHIPRECEIVE)	JO	(YES) / NO	2345	3.96	0.5 - 8
PDT-50415-01 Loadout Bin 410	HULL LOADOUT BAGHOUSE 1 (EUHULLLOADOUT)	JO	(YES) / NO	2345	0.80	0.2 - 5
PDT-50425-01 Loadout Bin 420	HULL LOADOUT BAGHOUSE 2 (EUHULLLOADOUT)	JO	YES / (NO)			0.2 - 5
PDT-50850-01	LOADOUT BAGHOUSE (EULOADOUT)	JO	(YES) / NO	2345	1.52	0.2 - 8
PDT-50950-01	INGREDIENTS BAGHOUSE (EUINGREDIENTS)	JO	YES / (NO)			0.2 - 8

Comments/Corrective Actions:

DAILY DIFFERENTIAL PRESSURE READINGS
SHIPPING/RECEIVING

Date: 8-11-21

Any units found to be outside of the designated operational limits need prompt reporting and corrective action.

DAY SHIFT READINGS

Supervisor: [signature]

Unit ID	Unit Name (Permit Emission Unit)	Operator Initials	Operating Today?	Time of Reading	Pressure Drop (in. W.C.)	
					Reading	Limit
KICE	RECEIVING BAGHOUSE (EUSHIPRECEIVE)	BP	(YES) / NO	11:43	3.62	0.5 - 8
PDT-50415-01 Loadout Bin 410	HULL LOADOUT BAGHOUSE 1 (EUHULLLOADOUT)	BP	YES / (NO)			0.2 - 5
PDT-50425-01 Loadout Bin 420	HULL LOADOUT BAGHOUSE 2 (EUHULLLOADOUT)	BP	YES / (NO)			0.2 - 5
PDT-50850-01	LOADOUT BAGHOUSE (EULOADOUT)	BP	(YES) / NO	11:43	1.46	0.2 - 8
PDT-50950-01	INGREDIENTS BAGHOUSE (EUINGREDIENTS)	BP	YES / (NO)			0.2 - 8

NIGHT SHIFT READINGS

Supervisor: [signature]

Unit ID	Unit Name (Permit Emission Unit)	Operator Initials	Operating Today?	Time of Reading	Pressure Drop (in. W.C.)	
					Reading	Limit
KICE	RECEIVING BAGHOUSE (EUSHIPRECEIVE)	JO	(YES) / NO	0135	3.92	0.5 - 8
PDT-50415-01 Loadout Bin 410	HULL LOADOUT BAGHOUSE 1 (EUHULLLOADOUT)	JO	(YES) / NO	0135	0.80	0.2 - 5
PDT-50425-01 Loadout Bin 420	HULL LOADOUT BAGHOUSE 2 (EUHULLLOADOUT)	JO	YES / (NO)			0.2 - 5
PDT-50850-01	LOADOUT BAGHOUSE (EULOADOUT)	JO	(YES) / NO	0135	1.86	0.2 - 8
PDT-50950-01	INGREDIENTS BAGHOUSE (EUINGREDIENTS)	JO	YES / (NO)			0.2 - 8

Comments/Corrective Actions:

DAILY DIFFERENTIAL PRESSURE READINGS
SHIPPING/RECEIVING

Date: 8-12-21

Any units found to be outside of the designated operational limits need prompt reporting and corrective action.

DAY SHIFT READINGS

Supervisor: [signature]

Unit ID	Unit Name (Permit Emission Unit)	Operator Initials	Operating Today?	Time of Reading	Pressure Drop (in. W.C.)	
					Reading	Limit
KICE	RECEIVING BAGHOUSE (EUSHIPRECEIVE)	RS	(YES) / NO	0830	3.43	0.5 - 8
PDT-50415-01 Loadout Bin 410	HULL LOADOUT BAGHOUSE 1 (EUHULLLOADOUT)	RS	(YES) / NO	0830	0.72	0.2 - 5
PDT-50425-01 Loadout Bin 420	HULL LOADOUT BAGHOUSE 2 (EUHULLLOADOUT)	RS	YES / (NO)			0.2 - 5
PDT-50850-01	LOADOUT BAGHOUSE (EULOADOUT)	RS	(YES) / NO	0830	1.43	0.2 - 8
PDT-50950-01	INGREDIENTS BAGHOUSE (EUINGREDIENTS)	RS	YES / (NO)			0.2 - 8

NIGHT SHIFT READINGS

Supervisor: [signature]

Unit ID	Unit Name (Permit Emission Unit)	Operator Initials	Operating Today?	Time of Reading	Pressure Drop (in. W.C.)	
					Reading	Limit
KICE	RECEIVING BAGHOUSE (EUSHIPRECEIVE)	SO	YES / (NO)			0.5 - 8
PDT-50415-01 Loadout Bin 410	HULL LOADOUT BAGHOUSE 1 (EUHULLLOADOUT)	SO	(YES) / NO	2255	0.79	0.2 - 5
PDT-50425-01 Loadout Bin 420	HULL LOADOUT BAGHOUSE 2 (EUHULLLOADOUT)	SO	YES / (NO)			0.2 - 5
PDT-50850-01	LOADOUT BAGHOUSE (EULOADOUT)	SO	(YES) / NO	2255	1.39	0.2 - 8
PDT-50950-01	INGREDIENTS BAGHOUSE (EUINGREDIENTS)	SO	YES / (NO)			0.2 - 8

Comments/Corrective Actions:

DAILY DIFFERENTIAL PRESSURE READINGS
SHIPPING/RECEIVING

Date: 8-13-21

Any units found to be outside of the designated operational limits need prompt reporting and corrective action.

DAY SHIFT READINGS

Supervisor: [signature]

Unit ID	Unit Name (Permit Emission Unit)	Operator Initials	Operating Today?	Time of Reading	Pressure Drop (in. W.C.)	
					Reading	Limit
KICE	RECEIVING BAGHOUSE (EUSHIPRECEIVE)	RLO	(YES) / NO	1640	3.09	0.5 - 8
PDT-50415-01 Loadout Bin 410	HULL LOADOUT BAGHOUSE 1 (EUHULLLOADOUT)	RLO	(YES) / NO	1640	0.76	0.2 - 5
PDT-50425-01 Loadout Bin 420	HULL LOADOUT BAGHOUSE 2 (EUHULLLOADOUT)	RLO	YES / (NO)			0.2 - 5
PDT-50850-01	LOADOUT BAGHOUSE (EULOADOUT)	RLO	(YES) / NO	1640	1.07	0.2 - 8
PDT-50950-01	INGREDIENTS BAGHOUSE (EUINGREDIENTS)	RLO	YES / (NO)			0.2 - 8

NIGHT SHIFT READINGS

Supervisor: [signature]

Unit ID	Unit Name (Permit Emission Unit)	Operator Initials	Operating Today?	Time of Reading	Pressure Drop (in. W.C.)	
					Reading	Limit
KICE	RECEIVING BAGHOUSE (EUSHIPRECEIVE)	JO	(YES) / NO	0005	3.23	0.5 - 8
PDT-50415-01 Loadout Bin 410	HULL LOADOUT BAGHOUSE 1 (EUHULLLOADOUT)	JO	(YES) / NO	0005	0.81	0.2 - 5
PDT-50425-01 Loadout Bin 420	HULL LOADOUT BAGHOUSE 2 (EUHULLLOADOUT)	JO	YES / (NO)	—	—	0.2 - 5
PDT-50850-01	LOADOUT BAGHOUSE (EULOADOUT)	JO	(YES) / NO	0005	1.31	0.2 - 8
PDT-50950-01	INGREDIENTS BAGHOUSE (EUINGREDIENTS)	JO	YES / (NO)	—	—	0.2 - 8

Comments/Corrective Actions:

DAILY DIFFERENTIAL PRESSURE READINGS
SHIPPING/RECEIVING

Date: 8-14-21

Any units found to be outside of the designated operational limits need prompt reporting and corrective action.

DAY SHIFT READINGS

Supervisor: [signature]

Unit ID	Unit Name (Permit Emission Unit)	Operator Initials	Operating Today?	Time of Reading	Pressure Drop (in. W.C.)	
					Reading	Limit
KICE	RECEIVING BAGHOUSE (EUSHIPRECEIVE)	RLO	YES / (NO)	1640		0.5 - 8
PDT-50415-01 Loadout Bin 410	HULL LOADOUT BAGHOUSE 1 (EUHULLLOADOUT)	RLO	(YES) / NO	1640	0,64	0.2 - 5
PDT-50425-01 Loadout Bin 420	HULL LOADOUT BAGHOUSE 2 (EUHULLLOADOUT)	RLO	YES / (NO)	1640		0.2 - 5
PDT-50850-01	LOADOUT BAGHOUSE (EULOADOUT)	RLO	(YES) / NO	1640	0,88	0.2 - 8
PDT-50950-01	INGREDIENTS BAGHOUSE (EUINGREDIENTS)	RLO	YES / (NO)	1640		0.2 - 8

NIGHT SHIFT READINGS

Supervisor: [signature]

Unit ID	Unit Name (Permit Emission Unit)	Operator Initials	Operating Today?	Time of Reading	Pressure Drop (in. W.C.)	
					Reading	Limit
KICE	RECEIVING BAGHOUSE (EUSHIPRECEIVE)	AM	YES / (NO)	—	—	0.5 - 8
PDT-50415-01 Loadout Bin 410	HULL LOADOUT BAGHOUSE 1 (EUHULLLOADOUT)	AM	(YES) / NO	19:28	0.60	0.2 - 5
PDT-50425-01 Loadout Bin 420	HULL LOADOUT BAGHOUSE 2 (EUHULLLOADOUT)	AM	YES / (NO)	—	—	0.2 - 5
PDT-50850-01	LOADOUT BAGHOUSE (EULOADOUT)	AM	(YES) / NO	19:28	0.82	0.2 - 8
PDT-50950-01	INGREDIENTS BAGHOUSE (EUINGREDIENTS)	AM	YES / (NO)	—	—	0.2 - 8

Comments/Corrective Actions:

DAILY DIFFERENTIAL PRESSURE READINGS
SHIPPING/RECEIVING

Date: 8-15-21

Any units found to be outside of the designated operational limits need prompt reporting and corrective action.

DAY SHIFT READINGS

Supervisor: [signature]

Unit ID	Unit Name (Permit Emission Unit)	Operator Initials	Operating Today?	Time of Reading	Pressure Drop (in. W.C.)	
					Reading	Limit
KICE	RECEIVING BAGHOUSE (EUSHIPRECEIVE)	RLO	YES / (NO)			0.5 - 8
PDT-50415-01 Loadout Bin 410	HULL LOADOUT BAGHOUSE 1 (EUHULLLOADOUT)	RLO	(YES) / NO	16:39	0.51	0.2 - 5
PDT-50425-01 Loadout Bin 420	HULL LOADOUT BAGHOUSE 2 (EUHULLLOADOUT)	RLO	YES / (NO)			0.2 - 5
PDT-50850-01	LOADOUT BAGHOUSE (EULOADOUT)	RLO	(YES) / NO	16:39	0.90	0.2 - 8
PDT-50950-01	INGREDIENTS BAGHOUSE (EUINGREDIENTS)	RLO	YES / (NO)			0.2 - 8

NIGHT SHIFT READINGS

Supervisor: [signature]

Unit ID	Unit Name (Permit Emission Unit)	Operator Initials	Operating Today?	Time of Reading	Pressure Drop (in. W.C.)	
					Reading	Limit
KICE	RECEIVING BAGHOUSE (EUSHIPRECEIVE)	BW	YES / (NO)	—	—	0.5 - 8
PDT-50415-01 Loadout Bin 410	HULL LOADOUT BAGHOUSE 1 (EUHULLLOADOUT)	BW	YES / (NO)	—	—	0.2 - 5
PDT-50425-01 Loadout Bin 420	HULL LOADOUT BAGHOUSE 2 (EUHULLLOADOUT)	BW	YES / (NO)	—	—	0.2 - 5
PDT-50850-01	LOADOUT BAGHOUSE (EULOADOUT)	BW	(YES) / NO	18:38	0.87	0.2 - 8
PDT-50950-01	INGREDIENTS BAGHOUSE (EUINGREDIENTS)	BW	YES / (NO)	—	—	0.2 - 8

Comments/Corrective Actions:

DAILY DIFFERENTIAL PRESSURE READINGS
SHIPPING/RECEIVING

Date: 8-16-21

Any units found to be outside of the designated operational limits need prompt reporting and corrective action.

DAY SHIFT READINGS

Supervisor: [signature]

Unit ID	Unit Name (Permit Emission Unit)	Operator Initials	Operating Today?	Time of Reading	Pressure Drop (in. W.C.)	
					Reading	Limit
KICE	RECEIVING BAGHOUSE (EUSHIPRECEIVE)	BP	(YES) / NO	~~09:06~~ BP 09:06	3.44	0.5 - 8
PDT-50415-01 Loadout Bin 410	HULL LOADOUT BAGHOUSE 1 (EUHULLLOADOUT)	BP	(YES) / NO	09:06	0.64	0.2 - 5
PDT-50425-01 Loadout Bin 420	HULL LOADOUT BAGHOUSE 2 (EUHULLLOADOUT)	BP	YES / (NO)			0.2 - 5
PDT-50850-01	LOADOUT BAGHOUSE (EULOADOUT)	BP	(YES) / NO	09:06	1.32	0.2 - 8
PDT-50950-01	INGREDIENTS BAGHOUSE (EUINGREDIENTS)	BP	YES / (NO)			0.2 - 8

NIGHT SHIFT READINGS

Supervisor: [signature]

Unit ID	Unit Name (Permit Emission Unit)	Operator Initials	Operating Today?	Time of Reading	Pressure Drop (in. W.C.)	
					Reading	Limit
KICE	RECEIVING BAGHOUSE (EUSHIPRECEIVE)	TH	YES / (NO)			0.5 - 8
PDT-50415-01 Loadout Bin 410	HULL LOADOUT BAGHOUSE 1 (EUHULLLOADOUT)	TH	(YES) / NO	04:31	0.70	0.2 - 5
PDT-50425-01 Loadout Bin 420	HULL LOADOUT BAGHOUSE 2 (EUHULLLOADOUT)	TH	YES / (NO)			0.2 - 5
PDT-50850-01	LOADOUT BAGHOUSE (EULOADOUT)	TH	(YES) / NO	04:30	1.33	0.2 - 8
PDT-50950-01	INGREDIENTS BAGHOUSE (EUINGREDIENTS)	TH	YES / (NO)			0.2 - 8

Comments/Corrective Actions:

DAILY DIFFERENTIAL PRESSURE READINGS
SHIPPING/RECEIVING

Date: 8-17-21

Any units found to be outside of the designated operational limits need prompt reporting and corrective action.

DAY SHIFT READINGS

Supervisor: Ryan Smith

Unit ID	Unit Name (Permit Emission Unit)	Operator Initials	Operating Today?	Time of Reading	Pressure Drop (in. W.C.)	
					Reading	Limit
KICE	RECEIVING BAGHOUSE (EUSHIPRECEIVE)	BP	(YES) / NO	07:45	3.66	0.5 - 8
PDT-50415-01 Loadout Bin 410	HULL LOADOUT BAGHOUSE 1 (EUHULLLOADOUT)	BP	(YES) / NO	07:45	0.70	0.2 - 5
PDT-50425-01 Loadout Bin 420	HULL LOADOUT BAGHOUSE 2 (EUHULLLOADOUT)	BP	YES / (NO)			0.2 - 5
PDT-50850-01	LOADOUT BAGHOUSE (EULOADOUT)	BP	(YES) / NO	07:45	1.45	0.2 - 8
PDT-50950-01	INGREDIENTS BAGHOUSE (EUINGREDIENTS)	BP	YES / (NO)			0.2 - 8

NIGHT SHIFT READINGS

Supervisor: [signature]

Unit ID	Unit Name (Permit Emission Unit)	Operator Initials	Operating Today?	Time of Reading	Pressure Drop (in. W.C.)	
					Reading	Limit
KICE	RECEIVING BAGHOUSE (EUSHIPRECEIVE)	JS	(YES) / NO	2201	3.21	0.5 - 8
PDT-50415-01 Loadout Bin 410	HULL LOADOUT BAGHOUSE 1 (EUHULLLOADOUT)	JS	(YES) / NO	2201	0.73	0.2 - 5
PDT-50425-01 Loadout Bin 420	HULL LOADOUT BAGHOUSE 2 (EUHULLLOADOUT)	JS	YES / (NO)			0.2 - 5
PDT-50850-01	LOADOUT BAGHOUSE (EULOADOUT)	JS	(YES) / NO	2201	1.34	0.2 - 8
PDT-50950-01	INGREDIENTS BAGHOUSE (EUINGREDIENTS)	JS	YES / (NO)		~~0.12~~ JS	0.2 - 8

Comments/Corrective Actions:

DAILY DIFFERENTIAL PRESSURE READINGS
SHIPPING/RECEIVING

Date: 8-18-21

Any units found to be outside of the designated operational limits need prompt reporting and corrective action.

DAY SHIFT READINGS

Supervisor: [signature]

Unit ID	Unit Name (Permit Emission Unit)	Operator Initials	Operating Today?	Time of Reading	Pressure Drop (in. W.C.)	
					Reading	Limit
KICE	RECEIVING BAGHOUSE (EUSHIPRECEIVE)	BP	(YES) / NO	14:35	3.30	0.5 - 8
PDT-50415-01 Loadout Bin 410	HULL LOADOUT BAGHOUSE 1 (EUHULLLOADOUT)	BP	(YES) / NO	14:35	0.84	0.2 - 5
PDT-50425-01 Loadout Bin 420	HULL LOADOUT BAGHOUSE 2 (EUHULLLOADOUT)	BP	YES / (NO)			0.2 - 5
PDT-50850-01	LOADOUT BAGHOUSE (EULOADOUT)	BP	(YES) / NO	14:35	1.23	0.2 - 8
PDT-50950-01	INGREDIENTS BAGHOUSE (EUINGREDIENTS)	BP BP	YES / (NO)			0.2 - 8

NIGHT SHIFT READINGS

Supervisor: [signature]

Unit ID	Unit Name (Permit Emission Unit)	Operator Initials	Operating Today?	Time of Reading	Pressure Drop (in. W.C.)	
					Reading	Limit
KICE	RECEIVING BAGHOUSE (EUSHIPRECEIVE)	SO	(YES) / NO	2230	3.86	0.5 - 8
PDT-50415-01 Loadout Bin 410	HULL LOADOUT BAGHOUSE 1 (EUHULLLOADOUT)	SO	(YES) / NO	2230	0.71	0.2 - 5
PDT-50425-01 Loadout Bin 420	HULL LOADOUT BAGHOUSE 2 (EUHULLLOADOUT)	SO	YES / (NO)			0.2 - 5
PDT-50850-01	LOADOUT BAGHOUSE (EULOADOUT)	SO	(YES) / NO	2230	1.31	0.2 - 8
PDT-50950-01	INGREDIENTS BAGHOUSE (EUINGREDIENTS)	SO	YES / (NO)			0.2 - 8

Comments/Corrective Actions:

DAILY DIFFERENTIAL PRESSURE READINGS
SHIPPING/RECEIVING

Date: 8-19-21

Any units found to be outside of the designated operational limits need prompt reporting and corrective action.

DAY SHIFT READINGS

Supervisor: [signature]

Unit ID	Unit Name (Permit Emission Unit)	Operator Initials	Operating Today?	Time of Reading	Pressure Drop (in. W.C.)	
					Reading	Limit
KICE	RECEIVING BAGHOUSE (EUSHIPRECEIVE)	BP	(YES) / NO	13:45	3.22	0.5 - 8
PDT-50415-01 Loadout Bin 410	HULL LOADOUT BAGHOUSE 1 (EUHULLLOADOUT)	BP	(YES) / NO	13145	0.82	0.2 - 5
PDT-50425-01 Loadout Bin 420	HULL LOADOUT BAGHOUSE 2 (EUHULLLOADOUT)	BP	YES / (NO)			0.2 - 5
PDT-50850-01	LOADOUT BAGHOUSE (EULOADOUT)	BP	(YES) / NO	BP ~~#~~ 13:45	1.18	0.2 - 8
PDT-50950-01	INGREDIENTS BAGHOUSE (EUINGREDIENTS)	BP	YES / (NO)			0.2 - 8

NIGHT SHIFT READINGS

Supervisor: [signature]

Unit ID	Unit Name (Permit Emission Unit)	Operator Initials	Operating Today?	Time of Reading	Pressure Drop (in. W.C.)	
					Reading	Limit
KICE	RECEIVING BAGHOUSE (EUSHIPRECEIVE)	TL	YES / (NO)			0.5 - 8
PDT-50415-01 Loadout Bin 410	HULL LOADOUT BAGHOUSE 1 (EUHULLLOADOUT)	TL	(YES) / NO	0225	0.74	0.2 - 5
PDT-50425-01 Loadout Bin 420	HULL LOADOUT BAGHOUSE 2 (EUHULLLOADOUT)	TL	YES / (NO)		~~1.4~~ TL	0.2 - 5
PDT-50850-01	LOADOUT BAGHOUSE (EULOADOUT)	TL	(YES) / NO	0225	1.40	0.2 - 8
PDT-50950-01	INGREDIENTS BAGHOUSE (EUINGREDIENTS)	TL	YES / (NO)			0.2 - 8

Comments/Corrective Actions:

DAILY DIFFERENTIAL PRESSURE READINGS
SHIPPING/RECEIVING

Date: 8-20-21

Any units found to be outside of the designated operational limits need prompt reporting and corrective action.

DAY SHIFT READINGS

Supervisor: Ryan Lee

Unit ID	Unit Name (Permit Emission Unit)	Operator Initials	Operating Today?	Time of Reading	Pressure Drop (in. W.C.)	
					Reading	Limit
KICE	RECEIVING BAGHOUSE (EUSHIPRECEIVE)	BP	(YES) / NO	7:45	3.73	0.5 - 8
PDT-50415-01 Loadout Bin 410	HULL LOADOUT BAGHOUSE 1 (EUHULLLOADOUT)	BP	(YES) / NO	7:45	0.75	0.2 - 5
PDT-50425-01 Loadout Bin 420	HULL LOADOUT BAGHOUSE 2 (EUHULLLOADOUT)	BP	YES / (NO)			0.2 - 5
PDT-50850-01	LOADOUT BAGHOUSE (EULOADOUT)	BP	(YES) / NO	7:45	1.87	0.2 - 8
PDT-50950-01	INGREDIENTS BAGHOUSE (EUINGREDIENTS)	BP	~~YES~~ / (NO) BP			0.2 - 8

NIGHT SHIFT READINGS

Supervisor: [illegible]

Unit ID	Unit Name (Permit Emission Unit)	Operator Initials	Operating Today?	Time of Reading	Pressure Drop (in. W.C.)	
					Reading	Limit
KICE	RECEIVING BAGHOUSE (EUSHIPRECEIVE)	SO	YES / (NO)			0.5 - 8
PDT-50415-01 Loadout Bin 410	HULL LOADOUT BAGHOUSE 1 (EUHULLLOADOUT)	SO	(YES) / NO	2355	0.74	0.2 - 5
PDT-50425-01 Loadout Bin 420	HULL LOADOUT BAGHOUSE 2 (EUHULLLOADOUT)	SO	YES / (NO)			0.2 - 5
PDT-50850-01	LOADOUT BAGHOUSE (EULOADOUT)	SO	(YES) / NO	2355	1.36	0.2 - 8
PDT-50950-01	INGREDIENTS BAGHOUSE (EUINGREDIENTS)	SO	YES / (NO)			0.2 - 8

Comments/Corrective Actions:

DAILY DIFFERENTIAL PRESSURE READINGS
SHIPPING/RECEIVING

Date: 8/21/21

Any units found to be outside of the designated operational limits need prompt reporting and corrective action.

DAY SHIFT READINGS

Supervisor: Jared Horn

Unit ID	Unit Name (Permit Emission Unit)	Operator Initials	Operating Today?	Time of Reading	Pressure Drop (in. W.C.)	
					Reading	Limit
KICE	RECEIVING BAGHOUSE (EUSHIPRECEIVE)	RS	YES / (NO)			0.5 - 8
PDT-50415-01 Loadout Bin 410	HULL LOADOUT BAGHOUSE 1 (EUHULLLOADOUT)	RS	(YES) / NO	10:40	0.69	0.2 - 5
PDT-50425-01 Loadout Bin 420	HULL LOADOUT BAGHOUSE 2 (EUHULLLOADOUT)	RS	YES / (NO)			0.2 - 5
PDT-50850-01	LOADOUT BAGHOUSE (EULOADOUT)	RS	(YES) / NO	10:40	1.14	0.2 - 8
PDT-50950-01	INGREDIENTS BAGHOUSE (EUINGREDIENTS)	RS	(YES) / NO	10:40	0.44	0.2 - 8

NIGHT SHIFT READINGS

Supervisor: [illegible]

Unit ID	Unit Name (Permit Emission Unit)	Operator Initials	Operating Today?	Time of Reading	Pressure Drop (in. W.C.)	
					Reading	Limit
KICE	RECEIVING BAGHOUSE (EUSHIPRECEIVE)	JV	(YES) / NO	20:00	3.68	0.5 - 8
PDT-50415-01 Loadout Bin 410	HULL LOADOUT BAGHOUSE 1 (EUHULLLOADOUT)	JV	(YES) / NO	20:00	0.60	0.2 - 5
PDT-50425-01 Loadout Bin 420	HULL LOADOUT BAGHOUSE 2 (EUHULLLOADOUT)	JV	YES / (NO)			0.2 - 5
PDT-50850-01	LOADOUT BAGHOUSE (EULOADOUT)	JV	(YES) / NO	20:00	1.44	0.2 - 8
PDT-50950-01	INGREDIENTS BAGHOUSE (EUINGREDIENTS)	JV	(YES) / NO	20:00	0.47	0.2 - 8

Comments/Corrective Actions:

DAILY DIFFERENTIAL PRESSURE READINGS
SHIPPING/RECEIVING

Date: 8/22/21

Any units found to be outside of the designated operational limits need prompt reporting and corrective action.

DAY SHIFT READINGS

Supervisor: _____

Unit ID	Unit Name (Permit Emission Unit)	Operator Initials	Operating Today?	Time of Reading	Pressure Drop (in. W.C.)	
					Reading	Limit
KICE	RECEIVING BAGHOUSE (EUSHIPRECEIVE)	RS	YES / (NO)			0.5 - 8
PDT-50415-01 Loadout Bin 410	HULL LOADOUT BAGHOUSE 1 (EUHULLLOADOUT)	RS	(YES) / NO	13:40	0.70	0.2 - 5
PDT-50425-01 Loadout Bin 420	HULL LOADOUT BAGHOUSE 2 (EUHULLLOADOUT)	RS	YES / (NO)			0.2 - 5
PDT-50850-01	LOADOUT BAGHOUSE (EULOADOUT)	RS	(YES) / NO	13:40	1.32	0.2 - 8
PDT-50950-01	INGREDIENTS BAGHOUSE (EUINGREDIENTS)	RS	(YES) / NO	13:40	0.26	0.2 - 8

NIGHT SHIFT READINGS

Supervisor: _____

Unit ID	Unit Name (Permit Emission Unit)	Operator Initials	Operating Today?	Time of Reading	Pressure Drop (in. W.C.)	
					Reading	Limit
KICE	RECEIVING BAGHOUSE (EUSHIPRECEIVE)	JS	YES / (NO)			0.5 - 8
PDT-50415-01 Loadout Bin 410	HULL LOADOUT BAGHOUSE 1 (EUHULLLOADOUT)	JS	(YES) / ~~NO~~ JS	01:30	0.69	0.2 - 5
PDT-50425-01 Loadout Bin 420	HULL LOADOUT BAGHOUSE 2 (EUHULLLOADOUT)	JS	(YES) / NO	01:30	0.70	0.2 - 5
PDT-50850-01	LOADOUT BAGHOUSE (EULOADOUT)	JS	(YES) / NO	01:30	1.47	0.2 - 8
PDT-50950-01	INGREDIENTS BAGHOUSE (EUINGREDIENTS)	JS	YES / (NO)			0.2 - 8

Comments/Corrective Actions:

DAILY DIFFERENTIAL PRESSURE READINGS
SHIPPING/RECEIVING

Date: 8-23-21

Any units found to be outside of the designated operational limits need prompt reporting and corrective action.

DAY SHIFT READINGS

Supervisor: [signature]

Unit ID	Unit Name (Permit Emission Unit)	Operator Initials	Operating Today?	Time of Reading	Pressure Drop (in. W.C.)	
					Reading	Limit
KICE	RECEIVING BAGHOUSE (EUSHIPRECEIVE)	RLO	(YES) / NO	10:17	3.86	0.5 - 8
PDT-50415-01 Loadout Bin 410	HULL LOADOUT BAGHOUSE 1 (EUHULLLOADOUT)	RLO	(YES) / NO	10:17	0.74	0.2 - 5
PDT-50425-01 Loadout Bin 420	HULL LOADOUT BAGHOUSE 2 (EUHULLLOADOUT)	RLO	YES (NO)	~~10:17~~ BMO		0.2 - 5
PDT-50850-01	LOADOUT BAGHOUSE (EULOADOUT)	RLO	(YES) / NO	10:17	1.72	0.2 - 8
PDT-50950-01	INGREDIENTS BAGHOUSE (EUINGREDIENTS)	RLO	YES / (NO)	~~10:17~~ BMO		0.2 - 8

NIGHT SHIFT READINGS

Supervisor: [signature]

Unit ID	Unit Name (Permit Emission Unit)	Operator Initials	Operating Today?	Time of Reading	Pressure Drop (in. W.C.)	
					Reading	Limit
KICE	RECEIVING BAGHOUSE (EUSHIPRECEIVE)	JM	(YES) / NO	JM 21:11	3.73	0.5 - 8
PDT-50415-01 Loadout Bin 410	HULL LOADOUT BAGHOUSE 1 (EUHULLLOADOUT)		YES / (NO)	—	—	0.2 - 5
PDT-50425-01 Loadout Bin 420	HULL LOADOUT BAGHOUSE 2 (EUHULLLOADOUT)		YES / (NO)	—	—	0.2 - 5
PDT-50850-01	LOADOUT BAGHOUSE (EULOADOUT)	JM	(YES) / NO	21:11	1.61	0.2 - 8
PDT-50950-01	INGREDIENTS BAGHOUSE (EUINGREDIENTS)		YES / (NO)	—	—	0.2 - 8

Comments/Corrective Actions:

DAILY DIFFERENTIAL PRESSURE READINGS
SHIPPING/RECEIVING

Date: 8-24-21

Any units found to be outside of the designated operational limits need prompt reporting and corrective action.

DAY SHIFT READINGS

Supervisor: [signature]

Unit ID	Unit Name (Permit Emission Unit)	Operator Initials	Operating Today?	Time of Reading	Pressure Drop (in. W.C.)	
					Reading	Limit
KICE	RECEIVING BAGHOUSE (EUSHIPRECEIVE)	BP	(YES) / NO	11:40	4.11	0.5 - 8
PDT-50415-01 Loadout Bin 410	HULL LOADOUT BAGHOUSE 1 (EUHULLLOADOUT)	BP	(YES) / NO	11:40	0.85	0.2 - 5
PDT-50425-01 Loadout Bin 420	HULL LOADOUT BAGHOUSE 2 (EUHULLLOADOUT)	BP	YES / (NO)			0.2 - 5
PDT-50850-01	LOADOUT BAGHOUSE (EULOADOUT)	BP	(YES) / NO	11:40	1.31	0.2 - 8
PDT-50950-01	INGREDIENTS BAGHOUSE (EUINGREDIENTS)	BP	YES / (NO)			0.2 - 8

NIGHT SHIFT READINGS

Supervisor: [signature]

Unit ID	Unit Name (Permit Emission Unit)	Operator Initials	Operating Today?	Time of Reading	Pressure Drop (in. W.C.)	
					Reading	Limit
KICE	RECEIVING BAGHOUSE (EUSHIPRECEIVE)	JY	YES / (NO)	—	—	0.5 - 8
PDT-50415-01 Loadout Bin 410	HULL LOADOUT BAGHOUSE 1 (EUHULLLOADOUT)	JY	YES / (NO)	—	—	0.2 - 5
PDT-50425-01 Loadout Bin 420	HULL LOADOUT BAGHOUSE 2 (EUHULLLOADOUT)	JY	YES / (NO)	—	—	0.2 - 5
PDT-50850-01	LOADOUT BAGHOUSE (EULOADOUT)	JY	(YES) / NO	17:24	1.23	0.2 - 8
PDT-50950-01	INGREDIENTS BAGHOUSE (EUINGREDIENTS)	JY	YES / (NO)	—	—	0.2 - 8

Comments/Corrective Actions:

DAILY DIFFERENTIAL PRESSURE READINGS
SHIPPING/RECEIVING

Date: 8/25/21

Any units found to be outside of the designated operational limits need prompt reporting and corrective action.

DAY SHIFT READINGS

Supervisor: [signature]

Unit ID	Unit Name (Permit Emission Unit)	Operator Initials	Operating Today?	Time of Reading	Pressure Drop (in. W.C.)	
					Reading	Limit
KICE	RECEIVING BAGHOUSE (EUSHIPRECEIVE)	RS	(YES) / NO	11:30	3.21	0.5 - 8
PDT-50415-01 Loadout Bin 410	HULL LOADOUT BAGHOUSE 1 (EUHULLLOADOUT)	RS	YES / NO			0.2 - 5
PDT-50425-01 Loadout Bin 420	HULL LOADOUT BAGHOUSE 2 (EUHULLLOADOUT)	RS	YES / NO			0.2 - 5
PDT-50850-01	LOADOUT BAGHOUSE (EULOADOUT)	RS	(YES) / NO	11:30	1.15	0.2 - 8
PDT-50950-01	INGREDIENTS BAGHOUSE (EUINGREDIENTS)	RS	(YES) / NO	11:30	0.40	0.2 - 8

NIGHT SHIFT READINGS

Supervisor: [signature]

Unit ID	Unit Name (Permit Emission Unit)	Operator Initials	Operating Today?	Time of Reading	Pressure Drop (in. W.C.)	
					Reading	Limit
KICE	RECEIVING BAGHOUSE (EUSHIPRECEIVE)	AM	YES / (NO)			0.5 - 8
PDT-50415-01 Loadout Bin 410	HULL LOADOUT BAGHOUSE 1 (EUHULLLOADOUT)	AM	YES / (NO)			0.2 - 5
PDT-50425-01 Loadout Bin 420	HULL LOADOUT BAGHOUSE 2 (EUHULLLOADOUT)	AM	YES / (NO)			0.2 - 5
PDT-50850-01	LOADOUT BAGHOUSE (EULOADOUT)	AM	(YES) / NO	2:00	1.66	0.2 - 8
PDT-50950-01	INGREDIENTS BAGHOUSE (EUINGREDIENTS)	AM	YES / (NO)			0.2 - 8

Comments/Corrective Actions:

DAILY DIFFERENTIAL PRESSURE READINGS
SHIPPING/RECEIVING

Date: 8/26/21

Any units found to be outside of the designated operational limits need prompt reporting and corrective action.

DAY SHIFT READINGS

Supervisor: R. S

Unit ID	Unit Name (Permit Emission Unit)	Operator Initials	Operating Today?	Time of Reading	Pressure Drop (in. W.C.)	
					Reading	Limit
KICE	RECEIVING BAGHOUSE (EUSHIPRECEIVE)	RS	(YES) / NO	10:30	3.21	0.5 - 8
PDT-50415-01 Loadout Bin 410	HULL LOADOUT BAGHOUSE 1 (EUHULLLOADOUT)	RS	YES / (NO)			0.2 - 5
PDT-50425-01 Loadout Bin 420	HULL LOADOUT BAGHOUSE 2 (EUHULLLOADOUT)	RS	YES / (NO)			0.2 - 5
PDT-50850-01	LOADOUT BAGHOUSE (EULOADOUT)	RS	(YES) / NO	10:30	1.16	0.2 - 8
PDT-50950-01	INGREDIENTS BAGHOUSE (EUINGREDIENTS)	RS	(YES) / NO	10:30	0.39	0.2 - 8

NIGHT SHIFT READINGS

Supervisor:

Unit ID	Unit Name (Permit Emission Unit)	Operator Initials	Operating Today?	Time of Reading	Pressure Drop (in. W.C.)	
					Reading	Limit
KICE	RECEIVING BAGHOUSE (EUSHIPRECEIVE)	SO	(YES) / NO	2355	4.04	0.5 - 8
PDT-50415-01 Loadout Bin 410	HULL LOADOUT BAGHOUSE 1 (EUHULLLOADOUT)	SO	(YES) / NO	2355	0.85	0.2 - 5
PDT-50425-01 Loadout Bin 420	HULL LOADOUT BAGHOUSE 2 (EUHULLLOADOUT)	SO	YES / (NO)			0.2 - 5
PDT-50850-01	LOADOUT BAGHOUSE (EULOADOUT)	SO	(YES) / NO	2355	1.43	0.2 - 8
PDT-50950-01	INGREDIENTS BAGHOUSE (EUINGREDIENTS)	SO	YES / (NO)			0.2 - 8

Comments/Corrective Actions:

DAILY DIFFERENTIAL PRESSURE READINGS
SHIPPING/RECEIVING

Date: 8-27-21

Any units found to be outside of the designated operational limits need prompt reporting and corrective action.

DAY SHIFT READINGS

Supervisor: [signature]

Unit ID	Unit Name (Permit Emission Unit)	Operator Initials	Operating Today?	Time of Reading	Pressure Drop (in. W.C.)	
					Reading	Limit
KICE	RECEIVING BAGHOUSE (EUSHIPRECEIVE)	RLO	(YES) / NO	9:32	4.20	0.5 - 8
PDT-50415-01 Loadout Bin 410	HULL LOADOUT BAGHOUSE 1 (EUHULLLOADOUT)	RLO	(YES) / NO	9:33	0.77	0.2 - 5
PDT-50425-01 Loadout Bin 420	HULL LOADOUT BAGHOUSE 2 (EUHULLLOADOUT)	RLO	YES / (NO)			0.2 - 5
PDT-50850-01	LOADOUT BAGHOUSE (EULOADOUT)	RLO	(YES) / NO	9:32	1.81	0.2 - 8
PDT-50950-01	INGREDIENTS BAGHOUSE (EUINGREDIENTS)	RLO	YES / (NO)			0.2 - 8

NIGHT SHIFT READINGS

Supervisor: [signature]

Unit ID	Unit Name (Permit Emission Unit)	Operator Initials	Operating Today?	Time of Reading	Pressure Drop (in. W.C.)	
					Reading	Limit
KICE	RECEIVING BAGHOUSE (EUSHIPRECEIVE)	SO	(YES) / NO	2230	4.07	0.5 - 8
PDT-50415-01 Loadout Bin 410	HULL LOADOUT BAGHOUSE 1 (EUHULLLOADOUT)	SO	(YES) / NO	2230	0.79	0.2 - 5
PDT-50425-01 Loadout Bin 420	HULL LOADOUT BAGHOUSE 2 (EUHULLLOADOUT)	SO	YES / (NO)			0.2 - 5
PDT-50850-01	LOADOUT BAGHOUSE (EULOADOUT)	SO	(YES) / NO	2230	1.54	0.2 - 8
PDT-50950-01	INGREDIENTS BAGHOUSE (EUINGREDIENTS)	SO	YES / (NO)			0.2 - 8

Comments/Corrective Actions:

DAILY DIFFERENTIAL PRESSURE READINGS
SHIPPING/RECEIVING

Date: 8-28-21

Any units found to be outside of the designated operational limits need prompt reporting and corrective action.

DAY SHIFT READINGS

Supervisor: Jyh all

Unit ID	Unit Name (Permit Emission Unit)	Operator Initials	Operating Today?	Time of Reading	Pressure Drop (in. W.C.)	
					Reading	Limit
KICE	RECEIVING BAGHOUSE (EUSHIPRECEIVE)	RLO	YES / (NO)			0.5 - 8
PDT-50415-01 Loadout Bin 410	HULL LOADOUT BAGHOUSE 1 (EUHULLLOADOUT)	RLO	YES / (NO)			0.2 - 5
PDT-50425-01 Loadout Bin 420	HULL LOADOUT BAGHOUSE 2 (EUHULLLOADOUT)	RLO	YES / (NO)			0.2 - 5
PDT-50850-01	LOADOUT BAGHOUSE (EULOADOUT)	RLO	(YES) / NO	11:15	1.40	0.2 - 8
PDT-50950-01	INGREDIENTS BAGHOUSE (EUINGREDIENTS)	RLO	YES / (NO)			0.2 - 8

NIGHT SHIFT READINGS

Supervisor: [signature]

Unit ID	Unit Name (Permit Emission Unit)	Operator Initials	Operating Today?	Time of Reading	Pressure Drop (in. W.C.)	
					Reading	Limit
KICE	RECEIVING BAGHOUSE (EUSHIPRECEIVE)	JY	YES / (NO)	-	-	0.5 - 8
PDT-50415-01 Loadout Bin 410	HULL LOADOUT BAGHOUSE 1 (EUHULLLOADOUT)	JY	YES / (NO)	-	-	0.2 - 5
PDT-50425-01 Loadout Bin 420	HULL LOADOUT BAGHOUSE 2 (EUHULLLOADOUT)	JY	YES / (NO)	-	-	0.2 - 5
PDT-50850-01	LOADOUT BAGHOUSE (EULOADOUT)	JY	(YES) / NO	22:12	1.22	0.2 - 8
PDT-50950-01	INGREDIENTS BAGHOUSE (EUINGREDIENTS)	JY	YES / (NO)	-	-	0.2 - 8

Comments/Corrective Actions:

DAILY DIFFERENTIAL PRESSURE READINGS
SHIPPING/RECEIVING

Date: 8-29-21

Any units found to be outside of the designated operational limits need prompt reporting and corrective action.

DAY SHIFT READINGS

Supervisor: [signature]

Unit ID	Unit Name (Permit Emission Unit)	Operator Initials	Operating Today?	Time of Reading	Pressure Drop (in. W.C.)	
					Reading	Limit
KICE	RECEIVING BAGHOUSE (EUSHIPRECEIVE)	RLO	YES / (NO)			0.5 - 8
PDT-50415-01 Loadout Bin 410	HULL LOADOUT BAGHOUSE 1 (EUHULLLOADOUT)	RLO	YES / (NO)			0.2 - 5
PDT-50425-01 Loadout Bin 420	HULL LOADOUT BAGHOUSE 2 (EUHULLLOADOUT)	RLO	YES / (NO)			0.2 - 5
PDT-50850-01	LOADOUT BAGHOUSE (EULOADOUT)	RLO	(YES) / NO	10:40	1.32	0.2 - 8
PDT-50950-01	INGREDIENTS BAGHOUSE (EUINGREDIENTS)	RLO	YES / (NO)			0.2 - 8

NIGHT SHIFT READINGS

Supervisor: [signature]

Unit ID	Unit Name (Permit Emission Unit)	Operator Initials	Operating Today?	Time of Reading	Pressure Drop (in. W.C.)	
					Reading	Limit
KICE	RECEIVING BAGHOUSE (EUSHIPRECEIVE)	JY	YES / (NO)	—	—	0.5 - 8
PDT-50415-01 Loadout Bin 410	HULL LOADOUT BAGHOUSE 1 (EUHULLLOADOUT)	JY	YES / (NO)	—	—	0.2 - 5
PDT-50425-01 Loadout Bin 420	HULL LOADOUT BAGHOUSE 2 (EUHULLLOADOUT)	JY	YES / (NO)	—	—	0.2 - 5
PDT-50850-01	LOADOUT BAGHOUSE (EULOADOUT)	JY	(YES) / NO	21115	1.24	0.2 - 8
PDT-50950-01	INGREDIENTS BAGHOUSE (EUINGREDIENTS)	JY	YES / (NO)	—	—	0.2 - 8

Comments/Corrective Actions:

DAILY DIFFERENTIAL PRESSURE READINGS
SHIPPING/RECEIVING

Date: 8-30-21

Any units found to be outside of the designated operational limits need prompt reporting and corrective action.

DAY SHIFT READINGS

Supervisor: Ryan Stup

Unit ID	Unit Name (Permit Emission Unit)	Operator Initials	Operating Today?	Time of Reading	Pressure Drop (in. W.C.)	
					Reading	Limit
KICE	RECEIVING BAGHOUSE (EUSHIPRECEIVE)	BP	(YES) / NO	08:33	4.19	0.5 - 8
PDT-50415-01 Loadout Bin 410	HULL LOADOUT BAGHOUSE 1 (EUHULLLOADOUT)	BP	(YES) / NO	08:33	0.70	0.2 - 5
PDT-50425-01 Loadout Bin 420	HULL LOADOUT BAGHOUSE 2 (EUHULLLOADOUT)	BP	YES / (NO)			0.2 - 5
PDT-50850-01	LOADOUT BAGHOUSE (EULOADOUT)	BP	(YES) / NO	08:33	1.66	0.2 - 8
PDT-50950-01	INGREDIENTS BAGHOUSE (EUINGREDIENTS)	BP	YES / (NO)			0.2 - 8

~~NIGHT SHIFT~~ READINGS

Supervisor:

Unit ID	Unit Name (Permit Emission Unit)	Operator Initials	Operating Today?	Time of Reading	Pressure Drop (in. W.C.)	
					Reading	Limit
KICE	RECEIVING BAGHOUSE (EUSHIPRECEIVE)	TL	(YES) / NO	00:07	3.86	0.5 - 8
PDT-50415-01 Loadout Bin 410	HULL LOADOUT BAGHOUSE 1 (EUHULLLOADOUT)	TL	YES / (NO)			0.2 - 5
PDT-50425-01 Loadout Bin 420	HULL LOADOUT BAGHOUSE 2 (EUHULLLOADOUT)	TL	YES / (NO)			0.2 - 5
PDT-50850-01	LOADOUT BAGHOUSE (EULOADOUT)	TL	(YES) / NO	00:07	1.03	0.2 - 8
PDT-50950-01	INGREDIENTS BAGHOUSE (EUINGREDIENTS)	~~TL~~ JO	(YES) / NO	00:07 JO	~~0.03~~ JO	0.2 - 8

Comments/Corrective Actions:

DAILY DIFFERENTIAL PRESSURE READINGS
SHIPPING/RECEIVING

Date: 8-31-21

Any units found to be outside of the designated operational limits need prompt reporting and corrective action.

DAY SHIFT READINGS

Supervisor: [signature]

Unit ID	Unit Name (Permit Emission Unit)	Operator Initials	Operating Today?	Time of Reading	Pressure Drop (in. W.C.)	
					Reading	Limit
KICE	RECEIVING BAGHOUSE (EUSHIPRECEIVE)	BP	(YES) / NO	15:09	3.89	0.5 - 8
PDT-50415-01 Loadout Bin 410	HULL LOADOUT BAGHOUSE 1 (EUHULLLOADOUT)	BP	(YES) / NO	15:09	0.78	0.2 - 5
PDT-50425-01 Loadout Bin 420	HULL LOADOUT BAGHOUSE 2 (EUHULLLOADOUT)	BP	YES / (NO)			0.2 - 5
PDT-50850-01	LOADOUT BAGHOUSE (EULOADOUT)	BP	(YES) / NO	15:09	1.07	0.2 - 8
PDT-50950-01	INGREDIENTS BAGHOUSE (EUINGREDIENTS)	BP	YES / (NO)			0.2 - 8

NIGHT SHIFT READINGS

Supervisor: [signature]

Unit ID	Unit Name (Permit Emission Unit)	Operator Initials	Operating Today?	Time of Reading	Pressure Drop (in. W.C.)	
					Reading	Limit
KICE	RECEIVING BAGHOUSE (EUSHIPRECEIVE)	SO	(YES) / NO	0045	4.33	0.5 - 8
PDT-50415-01 Loadout Bin 410	HULL LOADOUT BAGHOUSE 1 (EUHULLLOADOUT)	SO	(YES) / NO	0045	0.67	0.2 - 5
PDT-50425-01 Loadout Bin 420	HULL LOADOUT BAGHOUSE 2 (EUHULLLOADOUT)	SO	YES / (NO)			0.2 - 5
PDT-50850-01	LOADOUT BAGHOUSE (EULOADOUT)	SO	(YES) / NO	0045	1.56	0.2 - 8
PDT-50950-01	INGREDIENTS BAGHOUSE (EUINGREDIENTS)	SO	YES / (NO)			0.2 - 8

Comments/Corrective Actions:

DAILY DIFFERENTIAL PRESSURE READINGS
PREP

Date: 2-1-2022

Any units found to be outside of the designated operational limits need prompt reporting and corrective action.

DAY SHIFT READINGS

Supervisor: Brian McKay

Unit ID	Unit Name (Permit Emission Unit)	Operator Initials	Operating Today?	Time of Reading	Pressure Drop (in. W.C.)	
					Reading	Limit
PDT-20840-01	JET DRYER BAGHOUSE A (EUPREP)	SB	(YES) / NO	0623	2.89	0.5 - 10
PDT-20940-01	JET DRYER BAGHOUSE B (EUPREP)	SB	(YES) / NO	0624	1.86	0.5 - 10
PDT-21710-01	EXHAUST FILTER (EUPREP)	SB	(YES) / NO	0624	4.60	0.5 - 10
PDT-21875-01	HULL GRINDING BAGHOUSE (EUHULLGRINDING)	SB	(YES) / NO	0624	3.04	0.5 - 10
PDT-21690-01	MEAL GRINDING BAGHOUSE (EUMEALGRINDING)	SB	(YES) / NO	0625	3.48	0.5 - 10
PDT-50225-01	HULL STORAGE BIN 1 (EUHULLSTORAGE)	SB	YES / (NO)			0.2 - 5
PDT-50235-01	HULL STORAGE BIN 2 (EUHULLSTORAGE)	SB	(YES) / NO	0625	0.96	0.2 - 5
PDT-50245-01	HULL STORAGE BIN 3 (EUHULLSTORAGE)	SB	YES / (NO)			0.2 - 5
PDT-50255-01	HULL STORAGE BIN 4 (EUHULLSTORAGE)	SB	YES / (NO)			0.2 - 5

NIGHT SHIFT READINGS

Supervisor: Thomas Holland

Unit ID	Unit Name (Permit Emission Unit)	Operator Initials	Operating Today?	Time of Reading	Pressure Drop (in. W.C.)	
					Reading	Limit
PDT-20840-01	JET DRYER BAGHOUSE A (EUPREP)	JWS	(YES) / NO	1706	2.85	0.5 - 10
PDT-20940-01	JET DRYER BAGHOUSE B (EUPREP)	JWS	(YES) / NO	1706	1.93	0.5 - 10
PDT-21710-01	EXHAUST FILTER (EUPREP)	JWS	(YES) / NO	1707	4.64	0.5 - 10
PDT-21875-01	HULL GRINDING BAGHOUSE (EUHULLGRINDING)	JWS	(YES) / NO	1708	3.38	0.5 - 10
PDT-21690-01	MEAL GRINDING BAGHOUSE (EUMEALGRINDING)	JWS	(YES) / NO	1708	4.06	0.5 - 10
PDT-50225-01	HULL STORAGE BIN 1 (EUHULLSTORAGE)	JWS	YES / (NO)			0.2 - 5
PDT-50235-01	HULL STORAGE BIN 2 (EUHULLSTORAGE)	JWS	YES / (NO)			0.2 - 5
PDT-50245-01	HULL STORAGE BIN 3 (EUHULLSTORAGE)	JWS	(YES) / NO	1709	0.87	0.2 - 5
PDT-50255-01	HULL STORAGE BIN 4 (EUHULLSTORAGE)	JWS	YES / (NO)			0.2 - 5

...nts:

DAILY DIFFERENTIAL PRESSURE READINGS
PREP

Date: 2-2-22

Any units found to be outside of the designated operational limits need prompt reporting and corrective action.

DAY SHIFT READINGS

Supervisor: Bryan McKeefe

Unit ID	Unit Name (Permit Emission Unit)	Operator Initials	Operating Today?	Time of Reading	Pressure Drop (in. W.C.)	
					Reading	Limit
PDT-20840-01	JET DRYER BAGHOUSE A (EUPREP)	JJ	(YES) / NO	0523	2.9	0.5 - 10
PDT-20940-01	JET DRYER BAGHOUSE B (EUPREP)	JJ	(YES) / NO	0523	2.08	0.5 - 10
PDT-21710-01	EXHAUST FILTER (EUPREP)	JJ	(YES) / NO	0523	4.63	0.5 - 10
PDT-21875-01	HULL GRINDING BAGHOUSE (EUHULLGRINDING)	JJ	(YES) / NO	0523	2.99	0.5 - 10
PDT-21690-01	MEAL GRINDING BAGHOUSE (EUMEALGRINDING)	JJ	(YES) / NO	0523	4.01	0.5 - 10
PDT-50225-01	HULL STORAGE BIN 1 (EUHULLSTORAGE)	JJ	YES / (NO)			0.2 - 5
PDT-50235-01	HULL STORAGE BIN 2 (EUHULLSTORAGE)	JJ	YES / (NO)			0.2 - 5
PDT-50245-01	HULL STORAGE BIN 3 (EUHULLSTORAGE)	JJ	(YES) / NO	0523	0.88	0.2 - 5
PDT-50255-01	HULL STORAGE BIN 4 (EUHULLSTORAGE)	JJ	(YES) / NO	0759	0.93	0.2 - 5

NIGHT SHIFT READINGS

Supervisor: [illegible]

Unit ID	Unit Name (Permit Emission Unit)	Operator Initials	Operating Today?	Time of Reading	Pressure Drop (in. W.C.)	
					Reading	Limit
PDT-20840-01	JET DRYER BAGHOUSE A (EUPREP)	AJ	(YES) / NO	1707	2.89	0.5 - 10
PDT-20940-01	JET DRYER BAGHOUSE B (EUPREP)	AJ	(YES) / NO	1708	2.13	0.5 - 10
PDT-21710-01	EXHAUST FILTER (EUPREP)	AJ	(YES) / NO	1708	4.58	0.5 - 10
PDT-21875-01	HULL GRINDING BAGHOUSE (EUHULLGRINDING)	AJ	(YES) / NO	1708	2.62	0.5 - 10
PDT-21690-01	MEAL GRINDING BAGHOUSE (EUMEALGRINDING)	AJ	(YES) / NO	1709	4.30	0.5 - 10
PDT-50225-01	HULL STORAGE BIN 1 (EUHULLSTORAGE)	TH	(YES) / NO	1810	0.90	0.2 - 5
PDT-50235-01	HULL STORAGE BIN 2 (EUHULLSTORAGE)	TH	YES / (NO)			0.2 - 5
PDT-50245-01	HULL STORAGE BIN 3 (EUHULLSTORAGE)	TH	(YES) / NO	1700	0.87	0.2 - 5
PDT-50255-01	HULL STORAGE BIN 4 (EUHULLSTORAGE)	TH	YES / (NO)			0.2 - 5

Comments:

DAILY DIFFERENTIAL PRESSURE READINGS
PREP

Date: 2-3-22

Any units found to be outside of the designated operational limits need prompt reporting and corrective action.

DAY SHIFT READINGS

Supervisor: Byron Mathis

Unit ID	Unit Name (Permit Emission Unit)	Operator Initials	Operating Today?	Time of Reading	Pressure Drop (in. W.C.)	
					Reading	Limit
PDT-20840-01	JET DRYER BAGHOUSE A (EUPREP)	JJ	(YES) / NO	0520	2.88	0.5 - 10
PDT-20940-01	JET DRYER BAGHOUSE B (EUPREP)	JJ	(YES) / NO	0520	1.99	0.5 - 10
PDT-21710-01	EXHAUST FILTER (EUPREP)	JJ	(YES) / NO	0520	4.55	0.5 - 10
PDT-21875-01	HULL GRINDING BAGHOUSE (EUHULLGRINDING)	JJ	(YES) / NO	0520	2.63	0.5 - 10
PDT-21690-01	MEAL GRINDING BAGHOUSE (EUMEALGRINDING)	JJ	(YES) / NO	0520	4.43	0.5 - 10
PDT-50225-01	HULL STORAGE BIN 1 (EUHULLSTORAGE)	JJ	(YES) / NO	0520	0.89	0.2 - 5
PDT-50235-01	HULL STORAGE BIN 2 (EUHULLSTORAGE)	JJ	YES / (NO)			0.2 - 5
PDT-50245-01	HULL STORAGE BIN 3 (EUHULLSTORAGE)	JJ	YES / (NO)			0.2 - 5
PDT-50255-01	HULL STORAGE BIN 4 (EUHULLSTORAGE)	JJ	YES / (NO)			0.2 - 5

NIGHT SHIFT READINGS

Supervisor: Moses Mathis

Unit ID	Unit Name (Permit Emission Unit)	Operator Initials	Operating Today?	Time of Reading	Pressure Drop (in. W.C.)	
					Reading	Limit
PDT-20840-01	JET DRYER BAGHOUSE A (EUPREP)	RC	(YES) / NO	1730	2.96	0.5 - 10
PDT-20940-01	JET DRYER BAGHOUSE B (EUPREP)	RC	(YES) / NO	1730	2.02	0.5 - 10
PDT-21710-01	EXHAUST FILTER (EUPREP)	RC	(YES) / NO	1730	4.44	0.5 - 10
PDT-21875-01	HULL GRINDING BAGHOUSE (EUHULLGRINDING)	RC	(YES) / NO	1730	2.60	0.5 - 10
PDT-21690-01	MEAL GRINDING BAGHOUSE (EUMEALGRINDING)	RC	(YES) / NO	1730	4.36	0.5 - 10
PDT-50225-01	HULL STORAGE BIN 1 (EUHULLSTORAGE)	TH	(YES) / NO	1700	0.9	0.2 - 5
PDT-50235-01	HULL STORAGE BIN 2 (EUHULLSTORAGE)	RC	YES / (NO)			0.2 - 5
PDT-50245-01	HULL STORAGE BIN 3 (EUHULLSTORAGE)	RC	YES / (NO)			0.2 - 5
PDT-50255-01	HULL STORAGE BIN 4 (EUHULLSTORAGE)	RC	YES / (NO)			0.2 - 5

Comments:

DAILY DIFFERENTIAL PRESSURE READINGS
PREP

Date: 2-4-2022

Any units found to be outside of the designated operational limits need prompt reporting and corrective action.

DAY SHIFT READINGS

Supervisor: [signature]

Unit ID	Unit Name (Permit Emission Unit)	Operator Initials	Operating Today?	Time of Reading	Pressure Drop (in. W.C.)	
					Reading	Limit
PDT-20840-01	JET DRYER BAGHOUSE A (EUPREP)	JF	(YES) / NO	0707	2.97	0.5 - 10
PDT-20940-01	JET DRYER BAGHOUSE B (EUPREP)	JF	(YES) / NO	0707	2.36	0.5 - 10
PDT-21710-01	EXHAUST FILTER (EUPREP)	JF	(YES) / NO	0707	3.41	0.5 - 10
PDT-21875-01	HULL GRINDING BAGHOUSE (EUHULLGRINDING)	JF	(YES) / NO	0707	3.48	0.5 - 10
PDT-21690-01	MEAL GRINDING BAGHOUSE (EUMEALGRINDING)	JF	(YES) / NO	0707	4.24	0.5 - 10
PDT-50225-01	HULL STORAGE BIN 1 (EUHULLSTORAGE)	JF	(YES) / NO	0632	0.96	0.2 - 5
PDT-50235-01	HULL STORAGE BIN 2 (EUHULLSTORAGE)	JF	YES / (NO)			0.2 - 5
PDT-50245-01	HULL STORAGE BIN 3 (EUHULLSTORAGE)	JF	YES / (NO)			0.2 - 5
PDT-50255-01	HULL STORAGE BIN 4 (EUHULLSTORAGE)	JF	YES / (NO)			0.2 - 5

NIGHT SHIFT READINGS

Supervisor: [signature]

Unit ID	Unit Name (Permit Emission Unit)	Operator Initials	Operating Today?	Time of Reading	Pressure Drop (in. W.C.)	
					Reading	Limit
PDT-20840-01	JET DRYER BAGHOUSE A (EUPREP)	JG	(YES) / NO	1700	2.81	0.5 - 10
PDT-20940-01	JET DRYER BAGHOUSE B (EUPREP)	JG	(YES) / NO	1700	2.03	0.5 - 10
PDT-21710-01	EXHAUST FILTER (EUPREP)	JG	(YES) / NO	1701	4.41	0.5 - 10
PDT-21875-01	HULL GRINDING BAGHOUSE (EUHULLGRINDING)	JG	(YES) / NO	1701	5.68	0.5 - 10
PDT-21690-01	MEAL GRINDING BAGHOUSE (EUMEALGRINDING)	JG	(YES) / NO	1702	4.29	0.5 - 10
PDT-50225-01	HULL STORAGE BIN 1 (EUHULLSTORAGE)	JG	(YES) / NO	1712	1.05	0.2 - 5
PDT-50235-01	HULL STORAGE BIN 2 (EUHULLSTORAGE)	JG	YES / (NO)			0.2 - 5
PDT-50245-01	HULL STORAGE BIN 3 (EUHULLSTORAGE)	JG	(YES) / NO	1712	0.96	0.2 - 5
PDT-50255-01	HULL STORAGE BIN 4 (EUHULLSTORAGE)	JG	YES / (NO)			0.2 - 5

Comments:

DAILY DIFFERENTIAL PRESSURE READINGS
PREP

Date: 2/5/22

Any units found to be outside of the designated operational limits need prompt reporting and corrective action.

DAY SHIFT READINGS

Supervisor: [signature]

Unit ID	Unit Name (Permit Emission Unit)	Operator Initials	Operating Today?	Time of Reading	Pressure Drop (in. W.C.)	
					Reading	Limit
PDT-20840-01	JET DRYER BAGHOUSE A (EUPREP)	PS	(YES) / NO	0535	2.90	0.5 - 10
PDT-20940-01	JET DRYER BAGHOUSE B (EUPREP)	PS	(YES) / NO	0535	2.10	0.5 - 10
PDT-21710-01	EXHAUST FILTER (EUPREP)	PS	(YES) / NO	0537	4.48	0.5 - 10
PDT-21875-01	HULL GRINDING BAGHOUSE (EUHULLGRINDING)	PS	(YES) / NO	0540	2.79	0.5 - 10
PDT-21690-01	MEAL GRINDING BAGHOUSE (EUMEALGRINDING)	PS	(YES) / NO	0542	4.24	0.5 - 10
PDT-50225-01	HULL STORAGE BIN 1 (EUHULLSTORAGE)	PS	YES / (NO)			0.2 - 5
PDT-50235-01	HULL STORAGE BIN 2 (EUHULLSTORAGE)	PS	YES / (NO)			0.2 - 5
PDT-50245-01	HULL STORAGE BIN 3 (EUHULLSTORAGE)	PS	(YES) / NO	0530	0.85	0.2 - 5
PDT-50255-01	HULL STORAGE BIN 4 (EUHULLSTORAGE)	PS	YES / (NO)			0.2 - 5

NIGHT SHIFT READINGS

Supervisor: [signature]

Unit ID	Unit Name (Permit Emission Unit)	Operator Initials	Operating Today?	Time of Reading	Pressure Drop (in. W.C.)	
					Reading	Limit
PDT-20840-01	JET DRYER BAGHOUSE A (EUPREP)	JM	(YES) / NO	1715	2.88	0.5 - 10
PDT-20940-01	JET DRYER BAGHOUSE B (EUPREP)	JM	(YES) / NO	1715	2.11	0.5 - 10
PDT-21710-01	EXHAUST FILTER (EUPREP)	JM	(YES) / NO	1715	4.48	0.5 - 10
PDT-21875-01	HULL GRINDING BAGHOUSE (EUHULLGRINDING)	JM	(YES) / NO	1715	3.04	0.5 - 10
PDT-21690-01	MEAL GRINDING BAGHOUSE (EUMEALGRINDING)	JM	(YES) / NO	1715	4.32	0.5 - 10
PDT-50225-01	HULL STORAGE BIN 1 (EUHULLSTORAGE)	JM	YES / (NO)			0.2 - 5
PDT-50235-01	HULL STORAGE BIN 2 (EUHULLSTORAGE)	JM	YES / (NO)			0.2 - 5
PDT-50245-01	HULL STORAGE BIN 3 (EUHULLSTORAGE)	JM	(YES) / NO	1715	0.81	0.2 - 5
PDT-50255-01	HULL STORAGE BIN 4 (EUHULLSTORAGE)	JM	YES / (NO)			0.2 - 5

Comments:

DAILY DIFFERENTIAL PRESSURE READINGS
PREP

Date: 2/6/2023

Any units found to be outside of the designated operational limits need prompt reporting and corrective action.

DAY SHIFT READINGS

Supervisor: [signature]

Unit ID	Unit Name (Permit Emission Unit)	Operator Initials	Operating Today?	Time of Reading	Pressure Drop (in. W.C.)	
					Reading	Limit
PDT-20840-01	JET DRYER BAGHOUSE A (EUPREP)	JF	(YES) / NO	0601	2.85	0.5 - 10
PDT-20940-01	JET DRYER BAGHOUSE B (EUPREP)	JF	(YES) / NO	0601	2.01	0.5 - 10
PDT-21710-01	EXHAUST FILTER (EUPREP)	JF	(YES) / NO	0601	4.57	0.5 - 10
PDT-21875-01	HULL GRINDING BAGHOUSE (EUHULLGRINDING)	JF	(YES) / NO	0601	3.82	0.5 - 10
PDT-21690-01	MEAL GRINDING BAGHOUSE (EUMEALGRINDING)	JF	(YES) / NO	0601	4.27	0.5 - 10
PDT-50225-01	HULL STORAGE BIN 1 (EUHULLSTORAGE)	JF	YES / (NO)			0.2 - 5
PDT-50235-01	HULL STORAGE BIN 2 (EUHULLSTORAGE)	JF	(YES) / NO	1618	1.37	0.2 - 5
PDT-50245-01	HULL STORAGE BIN 3 (EUHULLSTORAGE)	JF	(YES) / NO	0603	0.84	0.2 - 5
PDT-50255-01	HULL STORAGE BIN 4 (EUHULLSTORAGE)	JF	YES / (NO)			0.2 - 5

NIGHT SHIFT READINGS

Supervisor: [signature]

Unit ID	Unit Name (Permit Emission Unit)	Operator Initials	Operating Today?	Time of Reading	Pressure Drop (in. W.C.)	
					Reading	Limit
PDT-20840-01	JET DRYER BAGHOUSE A (EUPREP)	JWS	(YES) / NO	1716	2.73	0.5 - 10
PDT-20940-01	JET DRYER BAGHOUSE B (EUPREP)	JWS	(YES) / NO	1716	1.99	0.5 - 10
PDT-21710-01	EXHAUST FILTER (EUPREP)	JWS	(YES) / NO	1717	4.66	0.5 - 10
PDT-21875-01	HULL GRINDING BAGHOUSE (EUHULLGRINDING)	JWS	(YES) / NO	1717	4.23	0.5 - 10
PDT-21690-01	MEAL GRINDING BAGHOUSE (EUMEALGRINDING)	JWS	(YES) / NO	1717	4.35	0.5 - 10
PDT-50225-01	HULL STORAGE BIN 1 (EUHULLSTORAGE)	TM	YES / (NO)	~~1218~~ JWS	~~0.9~~ JWS	0.2 - 5
PDT-50235-01	HULL STORAGE BIN 2 (EUHULLSTORAGE)	JWS	(YES) / NO	1718	0.95	0.2 - 5
PDT-50245-01	HULL STORAGE BIN 3 (EUHULLSTORAGE)	TM	YES / (NO)			0.2 - 5
PDT-50255-01	HULL STORAGE BIN 4 (EUHULLSTORAGE)	TM	YES / (NO)			0.2 - 5

Comments:

DAILY DIFFERENTIAL PRESSURE READINGS
PREP

Date: 2-7-22

Any units found to be outside of the designated operational limits need prompt reporting and corrective action.

DAY SHIFT READINGS

Supervisor: Bryan McWhorter

Unit ID	Unit Name (Permit Emission Unit)	Operator Initials	Operating Today?	Time of Reading	Pressure Drop (in. W.C.)	
					Reading	Limit
PDT-20840-01	JET DRYER BAGHOUSE A (EUPREP)	JJ	(YES) / NO	0539	2.82	0.5 - 10
PDT-20940-01	JET DRYER BAGHOUSE B (EUPREP)	JJ	(YES) / NO	0539	2.02	0.5 - 10
PDT-21710-01	EXHAUST FILTER (EUPREP)	JJ	(YES) / NO	0539	4.62	0.5 - 10
PDT-21875-01	HULL GRINDING BAGHOUSE (EUHULLGRINDING)	JJ	(YES) / NO	0539	3.47	0.5 - 10
PDT-21690-01	MEAL GRINDING BAGHOUSE (EUMEALGRINDING)	JJ	(YES) / NO	0539	4.3	0.5 - 10
PDT-50225-01	HULL STORAGE BIN 1 (EUHULLSTORAGE)	JJ	YES / (NO)			0.2 - 5
PDT-50235-01	HULL STORAGE BIN 2 (EUHULLSTORAGE)	JJ	(YES) / NO	0539	0.92	0.2 - 5
PDT-50245-01	HULL STORAGE BIN 3 (EUHULLSTORAGE)	JJ	YES / (NO)			0.2 - 5
PDT-50255-01	HULL STORAGE BIN 4 (EUHULLSTORAGE)	JJ	YES / (NO)			0.2 - 5

NIGHT SHIFT READINGS

Supervisor: Joseph Heaver

Unit ID	Unit Name (Permit Emission Unit)	Operator Initials	Operating Today?	Time of Reading	Pressure Drop (in. W.C.)	
					Reading	Limit
PDT-20840-01	JET DRYER BAGHOUSE A (EUPREP)	AJ	(YES) / NO	1733	2.87	0.5 - 10
PDT-20940-01	JET DRYER BAGHOUSE B (EUPREP)	AJ	(YES) / NO	1733	1.91	0.5 - 10
PDT-21710-01	EXHAUST FILTER (EUPREP)	AJ	(YES) / NO	1734	4.67	0.5 - 10
PDT-21875-01	HULL GRINDING BAGHOUSE (EUHULLGRINDING)	AJ	(YES) / NO	1734	2.89	0.5 - 10
PDT-21690-01	MEAL GRINDING BAGHOUSE (EUMEALGRINDING)	AJ	(YES) / NO	1734	4.30	0.5 - 10
PDT-50225-01	HULL STORAGE BIN 1 (EUHULLSTORAGE)	AJ	YES / (NO)			0.2 - 5
PDT-50235-01	HULL STORAGE BIN 2 (EUHULLSTORAGE)	AJ	(YES) / NO	1735	0.93	0.2 - 5
PDT-50245-01	HULL STORAGE BIN 3 (EUHULLSTORAGE)	AJ	YES / (NO)			0.2 - 5
PDT-50255-01	HULL STORAGE BIN 4 (EUHULLSTORAGE)	AJ	YES / (NO)			0.2 - 5

Comments:

DAILY DIFFERENTIAL PRESSURE READINGS
PREP

Date: 2-8-22

Any units found to be outside of the designated operational limits need prompt reporting and corrective action.

DAY SHIFT READINGS

Supervisor: Bryan McKee

Unit ID	Unit Name (Permit Emission Unit)	Operator Initials	Operating Today?	Time of Reading	Pressure Drop (in. W.C.)	
					Reading	Limit
PDT-20840-01	JET DRYER BAGHOUSE A (EUPREP)	PS	(YES) / NO	0530	2.85	0.5 - 10
PDT-20940-01	JET DRYER BAGHOUSE B (EUPREP)	PS	(YES) / NO	0530	2.00	0.5 - 10
PDT-21710-01	EXHAUST FILTER (EUPREP)	PS	(YES) / NO	0530	4.66	0.5 - 10
PDT-21875-01	HULL GRINDING BAGHOUSE (EUHULLGRINDING)	PS	(YES) / NO	0530	2.97	0.5 - 10
PDT-21690-01	MEAL GRINDING BAGHOUSE (EUMEALGRINDING)	PS	(YES) / NO	0530	4.36	0.5 - 10
PDT-50225-01	HULL STORAGE BIN 1 (EUHULLSTORAGE)	JJ	YES / (NO)			0.2 - 5
PDT-50235-01	HULL STORAGE BIN 2 (EUHULLSTORAGE)	PS	(YES) / NO	0530	0.91	0.2 - 5
PDT-50245-01	HULL STORAGE BIN 3 (EUHULLSTORAGE)	JJ	YES / (NO)			0.2 - 5
PDT-50255-01	HULL STORAGE BIN 4 (EUHULLSTORAGE)	JJ	YES / (NO)			0.2 - 5

NIGHT SHIFT READINGS

Supervisor: [illegible]

Unit ID	Unit Name (Permit Emission Unit)	Operator Initials	Operating Today?	Time of Reading	Pressure Drop (in. W.C.)	
					Reading	Limit
PDT-20840-01	JET DRYER BAGHOUSE A (EUPREP)	RL	(YES) / NO	1723	2.83	0.5 - 10
PDT-20940-01	JET DRYER BAGHOUSE B (EUPREP)	RL	(YES) / NO	1723	1.95	0.5 - 10
PDT-21710-01	EXHAUST FILTER (EUPREP)	RL	(YES) / NO	1723	4.65	0.5 - 10
PDT-21875-01	HULL GRINDING BAGHOUSE (EUHULLGRINDING)	RL	(YES) / NO	1723	3.00	0.5 - 10
PDT-21690-01	MEAL GRINDING BAGHOUSE (EUMEALGRINDING)	RL	(YES) / NO	1723	4.39	0.5 - 10
PDT-50225-01	HULL STORAGE BIN 1 (EUHULLSTORAGE)	RL	YES / (NO)			0.2 - 5
PDT-50235-01	HULL STORAGE BIN 2 (EUHULLSTORAGE)	RL	(YES) / NO	1723	0.90	0.2 - 5
PDT-50245-01	HULL STORAGE BIN 3 (EUHULLSTORAGE)	RL	(YES) / NO	2423	1.07	0.2 - 5
PDT-50255-01	HULL STORAGE BIN 4 (EUHULLSTORAGE)	RL	YES / (NO)			0.2 - 5

Comments:

DAILY DIFFERENTIAL PRESSURE READINGS
PREP

Date: 2-9-2022

Any units found to be outside of the designated operational limits need prompt reporting and corrective action.

DAY SHIFT READINGS

Supervisor: [signature]

Unit ID	Unit Name (Permit Emission Unit)	Operator Initials	Operating Today?	Time of Reading	Pressure Drop (in. W.C.)	
					Reading	Limit
PDT-20840-01	JET DRYER BAGHOUSE A (EUPREP)	PS	(YES) / NO	0520	2.84	0.5 - 10
PDT-20940-01	JET DRYER BAGHOUSE B (EUPREP)	PS	(YES) / NO	0526	1.94	0.5 - 10
PDT-21710-01	EXHAUST FILTER (EUPREP)	PS	(YES) / NO	0523	4.71	0.5 - 10
PDT-21875-01	HULL GRINDING BAGHOUSE (EUHULLGRINDING)	PS	(YES) / NO	0525	3.07	0.5 - 10
PDT-21690-01	MEAL GRINDING BAGHOUSE (EUMEALGRINDING)	PS	(YES) / NO	0525	4.39	0.5 - 10
PDT-50225-01	HULL STORAGE BIN 1 (EUHULLSTORAGE)	PS	(YES) / NO	0900	1.12	0.2 - 5
PDT-50235-01	HULL STORAGE BIN 2 (EUHULLSTORAGE)	PS	YES / (NO)			0.2 - 5
PDT-50245-01	HULL STORAGE BIN 3 (EUHULLSTORAGE)	PS	(YES) / NO	0525	0.88	0.2 - 5
PDT-50255-01	HULL STORAGE BIN 4 (EUHULLSTORAGE)	PS	(YES) / NO	0705	0.89	0.2 - 5

NIGHT SHIFT READINGS

Supervisor: [signature]

Unit ID	Unit Name (Permit Emission Unit)	Operator Initials	Operating Today?	Time of Reading	Pressure Drop (in. W.C.)	
					Reading	Limit
PDT-20840-01	JET DRYER BAGHOUSE A (EUPREP)	JG	(YES) / NO	1700	2.82	0.5 - 10
PDT-20940-01	JET DRYER BAGHOUSE B (EUPREP)	JG	(YES) / NO	1700	2.10	0.5 - 10
PDT-21710-01	EXHAUST FILTER (EUPREP)	JG	(YES) / NO	1701	4.77	0.5 - 10
PDT-21875-01	HULL GRINDING BAGHOUSE (EUHULLGRINDING)	JG	(YES) / NO	1701	2.97	0.5 - 10
PDT-21690-01	MEAL GRINDING BAGHOUSE (EUMEALGRINDING)	JG	(YES) / NO	1703	4.22	0.5 - 10
PDT-50225-01	HULL STORAGE BIN 1 (EUHULLSTORAGE)	JG	(YES) / NO	1715	0.95	0.2 - 5
PDT-50235-01	HULL STORAGE BIN 2 (EUHULLSTORAGE)	JG	YES / (NO)			0.2 - 5
PDT-50245-01	HULL STORAGE BIN 3 (EUHULLSTORAGE)	JG	YES / (NO)			0.2 - 5
PDT-50255-01	HULL STORAGE BIN 4 (EUHULLSTORAGE)	JG	YES / (NO)			0.2 - 5

Comments:

DAILY DIFFERENTIAL PRESSURE READINGS
PREP

Date: 2/10/2022

Any units found to be outside of the designated operational limits need prompt reporting and corrective action.

DAY SHIFT READINGS

Supervisor: Josh A

Unit ID	Unit Name (Permit Emission Unit)	Operator Initials	Operating Today?	Time of Reading	Pressure Drop (in. W.C.)	
					Reading	Limit
PDT-20840-01	JET DRYER BAGHOUSE A (EUPREP)	JF	(YES) / NO	0545	2.92	0.5 - 10
PDT-20940-01	JET DRYER BAGHOUSE B (EUPREP)	JF	(YES) / NO	0545	2.00	0.5 - 10
PDT-21710-01	EXHAUST FILTER (EUPREP)	JF	(YES) / NO	0545	4.93	0.5 - 10
PDT-21875-01	HULL GRINDING BAGHOUSE (EUHULLGRINDING)	JF	(YES) / NO	0545	3.34	0.5 - 10
PDT-21690-01	MEAL GRINDING BAGHOUSE (EUMEALGRINDING)	JF	(YES) / NO	0545	4.38	0.5 - 10
PDT-50225-01	HULL STORAGE BIN 1 (EUHULLSTORAGE)	JF	(YES) / NO	0519	0.93	0.2 - 5
PDT-50235-01	HULL STORAGE BIN 2 (EUHULLSTORAGE)	JF	(YES) / NO	1618 JF	1.13	0.2 - 5
PDT-50245-01	HULL STORAGE BIN 3 (EUHULLSTORAGE)	JF	YES / (NO)			0.2 - 5
PDT-50255-01	HULL STORAGE BIN 4 (EUHULLSTORAGE)	JF	YES / (NO)			0.2 - 5

NIGHT SHIFT READINGS

Supervisor: Bryan McKeefe

Unit ID	Unit Name (Permit Emission Unit)	Operator Initials	Operating Today?	Time of Reading	Pressure Drop (in. W.C.)	
					Reading	Limit
PDT-20840-01	JET DRYER BAGHOUSE A (EUPREP)	JM	(YES) / NO	1700	2.95	0.5 - 10
PDT-20940-01	JET DRYER BAGHOUSE B (EUPREP)	JM	(YES) / NO	1700	1.94	0.5 - 10
PDT-21710-01	EXHAUST FILTER (EUPREP)	JM	(YES) / NO	1700	5.31	0.5 - 10
PDT-21875-01	HULL GRINDING BAGHOUSE (EUHULLGRINDING)	JM	(YES) / NO	1700	4.24	0.5 - 10
PDT-21690-01	MEAL GRINDING BAGHOUSE (EUMEALGRINDING)	JM	(YES) / NO	1700	4.15	0.5 - 10
PDT-50225-01	HULL STORAGE BIN 1 (EUHULLSTORAGE)	JM	YES / (NO)			0.2 - 5
PDT-50235-01	HULL STORAGE BIN 2 (EUHULLSTORAGE)	JM	(YES) / NO	1700	0.93	0.2 - 5
PDT-50245-01	HULL STORAGE BIN 3 (EUHULLSTORAGE)	JM	YES / (NO)			0.2 - 5
PDT-50255-01	HULL STORAGE BIN 4 (EUHULLSTORAGE)	JM	YES / (NO)			0.2 - 5

Comments:

DAILY DIFFERENTIAL PRESSURE READINGS
PREP

Date: 2-11-22

Any units found to be outside of the designated operational limits need prompt reporting and corrective action.

DAY SHIFT READINGS

Supervisor: Bryan McReynolds

Unit ID	Unit Name (Permit Emission Unit)	Operator Initials	Operating Today?	Time of Reading	Pressure Drop (in. W.C.)	
					Reading	Limit
PDT-20840-01	JET DRYER BAGHOUSE A (EUPREP)	JJ	(YES) / NO	0515	2.89	0.5 - 10
PDT-20940-01	JET DRYER BAGHOUSE B (EUPREP)	JJ	(YES) / NO	0515	1.92	0.5 - 10
PDT-21710-01	EXHAUST FILTER (EUPREP)	JJ	(YES) / NO	0515	5.36	0.5 - 10
PDT-21875-01	HULL GRINDING BAGHOUSE (EUHULLGRINDING)	JJ	(YES) / NO	0515	2.49	0.5 - 10
PDT-21690-01	MEAL GRINDING BAGHOUSE (EUMEALGRINDING)	JJ	(YES) / NO	0515	4.48	0.5 - 10
PDT-50225-01	HULL STORAGE BIN 1 (EUHULLSTORAGE)	JJ	YES / (NO)			0.2 - 5
PDT-50235-01	HULL STORAGE BIN 2 (EUHULLSTORAGE)	JJ	(YES) / NO	0515	0.93	0.2 - 5
PDT-50245-01	HULL STORAGE BIN 3 (EUHULLSTORAGE)	JJ	YES / (NO)			0.2 - 5
PDT-50255-01	HULL STORAGE BIN 4 (EUHULLSTORAGE)	JJ	YES / (NO)			0.2 - 5

NIGHT SHIFT READINGS

Supervisor: Joseph Heaver

Unit ID	Unit Name (Permit Emission Unit)	Operator Initials	Operating Today?	Time of Reading	Pressure Drop (in. W.C.)	
					Reading	Limit
PDT-20840-01	JET DRYER BAGHOUSE A (EUPREP)	AJ	(YES) / NO	1729	2.87	0.5 - 10
PDT-20940-01	JET DRYER BAGHOUSE B (EUPREP)	AJ	(YES) / NO	1729	2.01	0.5 - 10
PDT-21710-01	EXHAUST FILTER (EUPREP)	AJ	(YES) / NO	1730	5.40	0.5 - 10
PDT-21875-01	HULL GRINDING BAGHOUSE (EUHULLGRINDING)	AJ	(YES) / NO	1730	2.63	0.5 - 10
PDT-21690-01	MEAL GRINDING BAGHOUSE (EUMEALGRINDING)	AJ	(YES) / NO	1730	4.46	0.5 - 10
PDT-50225-01	HULL STORAGE BIN 1 (EUHULLSTORAGE)	AJ	YES / (NO)			0.2 - 5
PDT-50235-01	HULL STORAGE BIN 2 (EUHULLSTORAGE)	AJ	(YES) / NO	1751	0.89	0.2 - 5
PDT-50245-01	HULL STORAGE BIN 3 (EUHULLSTORAGE)	AJ	YES / (NO)			0.2 - 5
PDT-50255-01	HULL STORAGE BIN 4 (EUHULLSTORAGE)	AJ	YES / (NO)			0.2 - 5

Comments:

DAILY DIFFERENTIAL PRESSURE READINGS
PREP

Date: 2-12-22

Any units found to be outside of the designated operational limits need prompt reporting and corrective action.

DAY SHIFT READINGS

Supervisor: Bryan McKeefe

Unit ID	Unit Name (Permit Emission Unit)	Operator Initials	Operating Today?	Time of Reading	Pressure Drop (in. W.C.)	
					Reading	Limit
PDT-20840-01	JET DRYER BAGHOUSE A (EUPREP)	ARS	YES / NO	0517	2.95	0.5 - 10
PDT-20940-01	JET DRYER BAGHOUSE B (EUPREP)	ARS	YES / NO	0519	2.22	0.5 - 10
PDT-21710-01	EXHAUST FILTER (EUPREP)	ARS	YES / NO	0520	5.35	0.5 - 10
PDT-21875-01	HULL GRINDING BAGHOUSE (EUHULLGRINDING)	ARS	YES / NO	0520	2.75	0.5 - 10
PDT-21690-01	MEAL GRINDING BAGHOUSE (EUMEALGRINDING)	ARS	YES / NO	0521	4.40	0.5 - 10
PDT-50225-01	HULL STORAGE BIN 1 (EUHULLSTORAGE)	VD	YES / NO			0.2 - 5
PDT-50235-01	HULL STORAGE BIN 2 (EUHULLSTORAGE)	ARS	YES / NO	0522	0.82	0.2 - 5
PDT-50245-01	HULL STORAGE BIN 3 (EUHULLSTORAGE)	ARS	YES / NO	1422	1.25	0.2 - 5
PDT-50255-01	HULL STORAGE BIN 4 (EUHULLSTORAGE)	VD	YES / NO			0.2 - 5

NIGHT SHIFT READINGS

Supervisor: Joseph Kenz

Unit ID	Unit Name (Permit Emission Unit)	Operator Initials	Operating Today?	Time of Reading	Pressure Drop (in. W.C.)	
					Reading	Limit
PDT-20840-01	JET DRYER BAGHOUSE A (EUPREP)	RC	YES / NO	1723	2.91	0.5 - 10
PDT-20940-01	JET DRYER BAGHOUSE B (EUPREP)	RC	YES / NO	1723	2.11	0.5 - 10
PDT-21710-01	EXHAUST FILTER (EUPREP)	RC	YES / NO	1723	5.32	0.5 - 10
PDT-21875-01	HULL GRINDING BAGHOUSE (EUHULLGRINDING)	RC	YES / NO	1723	2.77	0.5 - 10
PDT-21690-01	MEAL GRINDING BAGHOUSE (EUMEALGRINDING)	RC	YES / NO	1723	4.74	0.5 - 10
PDT-50225-01	HULL STORAGE BIN 1 (EUHULLSTORAGE)	RC	YES / NO			0.2 - 5
PDT-50235-01	HULL STORAGE BIN 2 (EUHULLSTORAGE)	RC	YES / NO			0.2 - 5
PDT-50245-01	HULL STORAGE BIN 3 (EUHULLSTORAGE)	RC	YES / NO	1723	0.82	0.2 - 5
PDT-50255-01	HULL STORAGE BIN 4 (EUHULLSTORAGE)	RC	YES / NO			0.2 - 5

Comments:

DAILY DIFFERENTIAL PRESSURE READINGS
PREP

Date: 2-13-2022

Any units found to be outside of the designated operational limits need prompt reporting and corrective action.

DAY SHIFT READINGS

Supervisor: Bryan McKay

Unit ID	Unit Name (Permit Emission Unit)	Operator Initials	Operating Today?	Time of Reading	Pressure Drop (in. W.C.)	
					Reading	Limit
PDT-20840-01	JET DRYER BAGHOUSE A (EUPREP)	PMS	(YES) / NO	0528	2.96	0.5 - 10
PDT-20940-01	JET DRYER BAGHOUSE B (EUPREP)	PMS	(YES) / NO	0528	2.04	0.5 - 10
PDT-21710-01	EXHAUST FILTER (EUPREP)	PMS	(YES) / NO	0530	5.35	0.5 - 10
PDT-21875-01	HULL GRINDING BAGHOUSE (EUHULLGRINDING)	PMS	(YES) / NO	0533	2.99	0.5 - 10
PDT-21690-01	MEAL GRINDING BAGHOUSE (EUMEALGRINDING)	PMS	(YES) / NO	0534	4.60	0.5 - 10
PDT-50225-01	HULL STORAGE BIN 1 (EUHULLSTORAGE)	PMS	YES / (NO)			0.2 - 5
PDT-50235-01	HULL STORAGE BIN 2 (EUHULLSTORAGE)	PMS	YES / (NO)			0.2 - 5
PDT-50245-01	HULL STORAGE BIN 3 (EUHULLSTORAGE)	PMS	(YES) / NO	0535	0.81	0.2 - 5
PDT-50255-01	HULL STORAGE BIN 4 (EUHULLSTORAGE)	PMS	YES / (NO)			0.2 - 5

NIGHT SHIFT READINGS

Supervisor: [signature]

Unit ID	Unit Name (Permit Emission Unit)	Operator Initials	Operating Today?	Time of Reading	Pressure Drop (in. W.C.)	
					Reading	Limit
PDT-20840-01	JET DRYER BAGHOUSE A (EUPREP)	AJ	(YES) / NO	1817	2.93	0.5 - 10
PDT-20940-01	JET DRYER BAGHOUSE B (EUPREP)	AJ	(YES) / NO	1817	2.01	0.5 - 10
PDT-21710-01	EXHAUST FILTER (EUPREP)	AJ	(YES) / NO	1817	5.35	0.5 - 10
PDT-21875-01	HULL GRINDING BAGHOUSE (EUHULLGRINDING)	AJ	(YES) / NO	1817	3.36	0.5 - 10
PDT-21690-01	MEAL GRINDING BAGHOUSE (EUMEALGRINDING)	AJ	(YES) / NO	1818	4.48	0.5 - 10
PDT-50225-01	HULL STORAGE BIN 1 (EUHULLSTORAGE)	AJ	YES / (NO)			0.2 - 5
PDT-50235-01	HULL STORAGE BIN 2 (EUHULLSTORAGE)	AJ	(YES) / NO	2302	0.90	0.2 - 5
PDT-50245-01	HULL STORAGE BIN 3 (EUHULLSTORAGE)	AJ	(YES) / NO	1818	0.79	0.2 - 5
PDT-50255-01	HULL STORAGE BIN 4 (EUHULLSTORAGE)	AJ	YES / (NO)			0.2 - 5

Comments:

DAILY DIFFERENTIAL PRESSURE READINGS
PREP

Date: 2-14-2022

Any units found to be outside of the designated operational limits need prompt reporting and corrective action.

DAY SHIFT READINGS

Supervisor: [signature]

Unit ID	Unit Name (Permit Emission Unit)	Operator Initials	Operating Today?	Time of Reading	Pressure Drop (in. W.C.)	
					Reading	Limit
PDT-20840-01	JET DRYER BAGHOUSE A (EUPREP)	PRS	(YES) / NO	0530	2.97	0.5 - 10
PDT-20940-01	JET DRYER BAGHOUSE B (EUPREP)	PRS	(YES) / NO	0530	2.09	0.5 - 10
PDT-21710-01	EXHAUST FILTER (EUPREP)	PRS	(YES) / NO	0531	5.33	0.5 - 10
PDT-21875-01	HULL GRINDING BAGHOUSE (EUHULLGRINDING)	PRS	(YES) / NO	0531	3.02	0.5 - 10
PDT-21690-01	MEAL GRINDING BAGHOUSE (EUMEALGRINDING)	PRS	(YES) / NO	0532	4.71	0.5 - 10
PDT-50225-01	HULL STORAGE BIN 1 (EUHULLSTORAGE)	PRS	YES / (NO)			0.2 - 5
PDT-50235-01	HULL STORAGE BIN 2 (EUHULLSTORAGE)	PRS	(YES) / NO	0514	0.87	0.2 - 5
PDT-50245-01	HULL STORAGE BIN 3 (EUHULLSTORAGE)	PRS	YES / (NO)			0.2 - 5
PDT-50255-01	HULL STORAGE BIN 4 (EUHULLSTORAGE)	PRS	YES / (NO)			0.2 - 5

NIGHT SHIFT READINGS

Supervisor: Thomas Holmes

Unit ID	Unit Name (Permit Emission Unit)	Operator Initials	Operating Today?	Time of Reading	Pressure Drop (in. W.C.)	
					Reading	Limit
PDT-20840-01	JET DRYER BAGHOUSE A (EUPREP)	MP	(YES) / NO	1710	2.97	0.5 - 10
PDT-20940-01	JET DRYER BAGHOUSE B (EUPREP)	MP	(YES) / NO	1710	1.86	0.5 - 10
PDT-21710-01	EXHAUST FILTER (EUPREP)	MP	(YES) / NO	1710	5.36	0.5 - 10
PDT-21875-01	HULL GRINDING BAGHOUSE (EUHULLGRINDING)	MP	(YES) / NO	1710	2.66	0.5 - 10
PDT-21690-01	MEAL GRINDING BAGHOUSE (EUMEALGRINDING)	MP	(YES) / NO	1710	4.60	0.5 - 10
PDT-50225-01	HULL STORAGE BIN 1 (EUHULLSTORAGE)	JH	(YES) / NO	2130	1.05	0.2 - 5
PDT-50235-01	HULL STORAGE BIN 2 (EUHULLSTORAGE)	MP	(YES) NO	1712	0.87	0.2 - 5
PDT-50245-01	HULL STORAGE BIN 3 (EUHULLSTORAGE)	MP	YES / (NO)			0.2 - 5
PDT-50255-01	HULL STORAGE BIN 4 (EUHULLSTORAGE)	MP	YES / (NO)			0.2 - 5

Comments:

DAILY DIFFERENTIAL PRESSURE READINGS
PREP

Date: 2-15-2022

Any units found to be outside of the designated operational limits need prompt reporting and corrective action.

DAY SHIFT READINGS

Supervisor: [signature]

Unit ID	Unit Name (Permit Emission Unit)	Operator Initials	Operating Today?	Time of Reading	Pressure Drop (in. W.C.)	
					Reading	Limit
PDT-20840-01	JET DRYER BAGHOUSE A (EUPREP)	JF	(YES) / NO	0540	3.06	0.5 - 10
PDT-20940-01	JET DRYER BAGHOUSE B (EUPREP)	JF	(YES) / NO	0540	1.80	0.5 - 10
PDT-21710-01	EXHAUST FILTER (EUPREP)	JF	(YES) / NO	0540	5.41	0.5 - 10
PDT-21875-01	HULL GRINDING BAGHOUSE (EUHULLGRINDING)	JF	(YES) / NO	0540	2.91	0.5 - 10
PDT-21690-01	MEAL GRINDING BAGHOUSE (EUMEALGRINDING)	JF	(YES) / NO	0540	4.71	0.5 - 10
PDT-50225-01	HULL STORAGE BIN 1 (EUHULLSTORAGE)	JF	(YES) / NO	0525	0.96	0.2 - 5
PDT-50235-01	HULL STORAGE BIN 2 (EUHULLSTORAGE)	JF	YES / (NO)			0.2 - 5
PDT-50245-01	HULL STORAGE BIN 3 (EUHULLSTORAGE)	JF	YES / (NO)			0.2 - 5
PDT-50255-01	HULL STORAGE BIN 4 (EUHULLSTORAGE)	JF	YES / (NO)			0.2 - 5

NIGHT SHIFT READINGS

Supervisor: [signature]

Unit ID	Unit Name (Permit Emission Unit)	Operator Initials	Operating Today?	Time of Reading	Pressure Drop (in. W.C.)	
					Reading	Limit
PDT-20840-01	JET DRYER BAGHOUSE A (EUPREP)	JC	(YES) / NO	1710	3.00	0.5 - 10
PDT-20940-01	JET DRYER BAGHOUSE B (EUPREP)	JC	(YES) / NO	1710	1.70	0.5 - 10
PDT-21710-01	EXHAUST FILTER (EUPREP)	JC	(YES) / NO	1710	5.50	0.5 - 10
PDT-21875-01	HULL GRINDING BAGHOUSE (EUHULLGRINDING)	JC	(YES) / NO	1711	2.98	0.5 - 10
PDT-21690-01	MEAL GRINDING BAGHOUSE (EUMEALGRINDING)	JC	(YES) / NO	1712	4.60	0.5 - 10
PDT-50225-01	HULL STORAGE BIN 1 (EUHULLSTORAGE)	JC	(YES) / NO	1715	0.96	0.2 - 5
PDT-50235-01	HULL STORAGE BIN 2 (EUHULLSTORAGE)	JM	YES / (NO)			0.2 - 5
PDT-50245-01	HULL STORAGE BIN 3 (EUHULLSTORAGE)	JM	YES / (NO)			0.2 - 5
PDT-50255-01	HULL STORAGE BIN 4 (EUHULLSTORAGE)	JM	YES / (NO)			0.2 - 5

Comments:

DAILY DIFFERENTIAL PRESSURE READINGS
PREP

Date: 2-16-2022

Any units found to be outside of the designated operational limits need prompt reporting and corrective action.

DAY SHIFT READINGS

Supervisor: Bryan McKeel

Unit ID	Unit Name (Permit Emission Unit)	Operator Initials	Operating Today?	Time of Reading	Pressure Drop (in. W.C.)	
					Reading	Limit
PDT-20840-01	JET DRYER BAGHOUSE A (EUPREP)	JJ	(YES) / NO	1643	2.9	0.5 - 10
PDT-20940-01	JET DRYER BAGHOUSE B (EUPREP)	JJ	(YES) / NO	1643	1.79	0.5 - 10
PDT-21710-01	EXHAUST FILTER (EUPREP)	JJ	(YES) / NO	1643	5.25	0.5 - 10
PDT-21875-01	HULL GRINDING BAGHOUSE (EUHULLGRINDING)	JJ	(YES) / NO	1643	4.33	0.5 - 10
PDT-21690-01	MEAL GRINDING BAGHOUSE (EUMEALGRINDING)	JJ	(YES) / NO	1643	4.58	0.5 - 10
PDT-50225-01	HULL STORAGE BIN 1 (EUHULLSTORAGE)	JJ	(YES) / NO	1644	0.94	0.2 - 5
PDT-50235-01	HULL STORAGE BIN 2 (EUHULLSTORAGE)	JJ	YES / (NO)			0.2 - 5
PDT-50245-01	HULL STORAGE BIN 3 (EUHULLSTORAGE)	JJ	YES / (NO)			0.2 - 5
PDT-50255-01	HULL STORAGE BIN 4 (EUHULLSTORAGE)	JJ	(YES) / NO	0722	0.9	0.2 - 5

NIGHT SHIFT READINGS

Supervisor: Joseph Hearn

Unit ID	Unit Name (Permit Emission Unit)	Operator Initials	Operating Today?	Time of Reading	Pressure Drop (in. W.C.)	
					Reading	Limit
PDT-20840-01	JET DRYER BAGHOUSE A (EUPREP)	RC	(YES) / NO	1725	2.93	0.5 - 10
PDT-20940-01	JET DRYER BAGHOUSE B (EUPREP)	RC	(YES) / NO	1725	1.72	0.5 - 10
PDT-21710-01	EXHAUST FILTER (EUPREP)	RC	(YES) / NO	1725	5.29	0.5 - 10
PDT-21875-01	HULL GRINDING BAGHOUSE (EUHULLGRINDING)	RC	(YES) / NO	1725	4.44	0.5 - 10
PDT-21690-01	MEAL GRINDING BAGHOUSE (EUMEALGRINDING)	RC	(YES) / NO	1725	4.63	0.5 - 10
PDT-50225-01	HULL STORAGE BIN 1 (EUHULLSTORAGE)	RC	(YES) / NO	1726	0.93	0.2 - 5
PDT-50235-01	HULL STORAGE BIN 2 (EUHULLSTORAGE)	RC	YES / (NO)			0.2 - 5
PDT-50245-01	HULL STORAGE BIN 3 (EUHULLSTORAGE)	RC	(YES) / NO	0321	0.88	0.2 - 5
PDT-50255-01	HULL STORAGE BIN 4 (EUHULLSTORAGE)	RC	YES / (NO)			0.2 - 5

Comments:

DAILY DIFFERENTIAL PRESSURE READINGS
PREP

Date: 2/17/2022

Any units found to be outside of the designated operational limits need prompt reporting and corrective action.

DAY SHIFT READINGS

Supervisor: [illegible]

Unit ID	Unit Name (Permit Emission Unit)	Operator Initials	Operating Today?	Time of Reading	Pressure Drop (in. W.C.)	
					Reading	Limit
PDT-20840-01	JET DRYER BAGHOUSE A (EUPREP)	PMS	(YES) / NO	0515	2.99	0.5 - 10
PDT-20940-01	JET DRYER BAGHOUSE B (EUPREP)	PMS	(YES) / NO	0515	1.92	0.5 - 10
PDT-21710-01	EXHAUST FILTER (EUPREP)	PMS	(YES) / NO	0515	7.56	0.5 - 10
PDT-21875-01	HULL GRINDING BAGHOUSE (EUHULLGRINDING)	PMS	(YES) / NO	0515	2.49	0.5 - 10
PDT-21690-01	MEAL GRINDING BAGHOUSE (EUMEALGRINDING)	PMS	(YES) / NO	0515	4.62	0.5 - 10
PDT-50225-01	HULL STORAGE BIN 1 (EUHULLSTORAGE)	PMS	YES / (NO)			0.2 - 5
PDT-50235-01	HULL STORAGE BIN 2 (EUHULLSTORAGE)	PMS	YES / (NO)			0.2 - 5
PDT-50245-01	HULL STORAGE BIN 3 (EUHULLSTORAGE)	PMS	(YES) / NO	0506	0.86	0.2 - 5
PDT-50255-01	HULL STORAGE BIN 4 (EUHULLSTORAGE)	PMS	YES / (NO)			0.2 - 5

NIGHT SHIFT READINGS

Supervisor: Joseph Keezer

Unit ID	Unit Name (Permit Emission Unit)	Operator Initials	Operating Today?	Time of Reading	Pressure Drop (in. W.C.)	
					Reading	Limit
PDT-20840-01	JET DRYER BAGHOUSE A (EUPREP)	AJ	(YES) / NO	1713	2.87	0.5 - 10
PDT-20940-01	JET DRYER BAGHOUSE B (EUPREP)	AJ	(YES) / NO	1714	1.81	0.5 - 10
PDT-21710-01	EXHAUST FILTER (EUPREP)	AJ	(YES) / NO	1714	2.06	0.5 - 10
PDT-21875-01	HULL GRINDING BAGHOUSE (EUHULLGRINDING)	AJ	(YES) / NO	1714	2.71	0.5 - 10
PDT-21690-01	MEAL GRINDING BAGHOUSE (EUMEALGRINDING)	AJ	(YES) / NO	1714	4.67	0.5 - 10
PDT-50225-01	HULL STORAGE BIN 1 (EUHULLSTORAGE)	AJ	YES / (NO)			0.2 - 5
PDT-50235-01	HULL STORAGE BIN 2 (EUHULLSTORAGE)	AJ	YES / (NO)			0.2 - 5
PDT-50245-01	HULL STORAGE BIN 3 (EUHULLSTORAGE)	AJ	(YES) / NO	1715	0.85	0.2 - 5
PDT-50255-01	HULL STORAGE BIN 4 (EUHULLSTORAGE)	AJ	YES / (NO)			0.2 - 5

Comments:

DAILY DIFFERENTIAL PRESSURE READINGS
PREP

Date: 2/18/2022

Any units found to be outside of the designated operational limits need prompt reporting and corrective action.

DAY SHIFT READINGS

Supervisor: [signature]

Unit ID	Unit Name (Permit Emission Unit)	Operator Initials	Operating Today?	Time of Reading	Pressure Drop (in. W.C.)	
					Reading	Limit
PDT-20840-01	JET DRYER BAGHOUSE A (EUPREP)	PRS	(YES) / NO	0518	2.95	0.5 - 10
PDT-20940-01	JET DRYER BAGHOUSE B (EUPREP)	PRS	(YES) / NO	0520	1.80	0.5 - 10
PDT-21710-01	EXHAUST FILTER (EUPREP)	PRS	(YES) / NO	1310	3.63	0.5 - 10
PDT-21875-01	HULL GRINDING BAGHOUSE (EUHULLGRINDING)	PRS	(YES) / NO	0522	2.86	0.5 - 10
PDT-21690-01	MEAL GRINDING BAGHOUSE (EUMEALGRINDING)	PRS	(YES) / NO	0523	4.86	0.5 - 10
PDT-50225-01	HULL STORAGE BIN 1 (EUHULLSTORAGE)	PRS	YES / (NO)			0.2 - 5
PDT-50235-01	HULL STORAGE BIN 2 (EUHULLSTORAGE)	PRS	YES / (NO)			0.2 - 5
PDT-50245-01	HULL STORAGE BIN 3 (EUHULLSTORAGE)	PRS	(YES) / NO	0508	0.92	0.2 - 5
PDT-50255-01	HULL STORAGE BIN 4 (EUHULLSTORAGE)	PRS	YES / (NO)			0.2 - 5

NIGHT SHIFT READINGS

Supervisor: [signature]

Unit ID	Unit Name (Permit Emission Unit)	Operator Initials	Operating Today?	Time of Reading	Pressure Drop (in. W.C.)	
					Reading	Limit
PDT-20840-01	JET DRYER BAGHOUSE A (EUPREP)	JM	(YES) / NO	1710	2.80	0.5 - 10
PDT-20940-01	JET DRYER BAGHOUSE B (EUPREP)	JM	(YES) / NO	1710	1.79	0.5 - 10
PDT-21710-01	EXHAUST FILTER (EUPREP)	JM	(YES) / NO	1710	5.21	0.5 - 10
PDT-21875-01	HULL GRINDING BAGHOUSE (EUHULLGRINDING)	JM	(YES) / NO	1710	2.90	0.5 - 10
PDT-21690-01	MEAL GRINDING BAGHOUSE (EUMEALGRINDING)	JM	(YES) / NO	1710	4.74	0.5 - 10
PDT-50225-01	HULL STORAGE BIN 1 (EUHULLSTORAGE)	JM	YES / (NO)			0.2 - 5
PDT-50235-01	HULL STORAGE BIN 2 (EUHULLSTORAGE)	JM	(YES) / NO	1710	0.91	0.2 - 5
PDT-50245-01	HULL STORAGE BIN 3 (EUHULLSTORAGE)	JM	YES / (NO)			0.2 - 5
PDT-50255-01	HULL STORAGE BIN 4 (EUHULLSTORAGE)	JM	YES / (NO)			0.2 - 5

Comments:

DAILY DIFFERENTIAL PRESSURE READINGS
PREP

Date: 2/19/2022

Any units found to be outside of the designated operational limits need prompt reporting and corrective action.

DAY SHIFT READINGS

Supervisor: [signature]

Unit ID	Unit Name (Permit Emission Unit)	Operator Initials	Operating Today?	Time of Reading	Pressure Drop (in. W.C.)	
					Reading	Limit
PDT-20840-01	JET DRYER BAGHOUSE A (EUPREP)	JF	(YES) / NO	0554	2.79	0.5 - 10
PDT-20940-01	JET DRYER BAGHOUSE B (EUPREP)	JF	(YES) / NO	0554	1.88	0.5 - 10
PDT-21710-01	EXHAUST FILTER (EUPREP)	JF	(YES) / NO	0557	6.13	0.5 - 10
PDT-21875-01	HULL GRINDING BAGHOUSE (EUHULLGRINDING)	JF	(YES) / NO	0554	3.6	0.5 - 10
PDT-21690-01	MEAL GRINDING BAGHOUSE (EUMEALGRINDING)	JF	(YES) / NO	0554	4.84	0.5 - 10
PDT-50225-01	HULL STORAGE BIN 1 (EUHULLSTORAGE)	JF	YES / (NO)			0.2 - 5
PDT-50235-01	HULL STORAGE BIN 2 (EUHULLSTORAGE)	JF	(YES) / NO	0517	0.90	0.2 - 5
PDT-50245-01	HULL STORAGE BIN 3 (EUHULLSTORAGE)	JF	YES / (NO)			0.2 - 5
PDT-50255-01	HULL STORAGE BIN 4 (EUHULLSTORAGE)	JF	YES / (NO)			0.2 - 5

NIGHT SHIFT READINGS

Supervisor: [signature]

Unit ID	Unit Name (Permit Emission Unit)	Operator Initials	Operating Today?	Time of Reading	Pressure Drop (in. W.C.)	
					Reading	Limit
PDT-20840-01	JET DRYER BAGHOUSE A (EUPREP)	JG	(YES) / NO	1800	2.82	0.5 - 10
PDT-20940-01	JET DRYER BAGHOUSE B (EUPREP)	JG	(YES) / NO	1800	1.98	0.5 - 10
PDT-21710-01	EXHAUST FILTER (EUPREP)	JG	(YES) / NO	1800	5.69	0.5 - 10
PDT-21875-01	HULL GRINDING BAGHOUSE (EUHULLGRINDING)	JG	(YES) / NO	1801	3.85	0.5 - 10
PDT-21690-01	MEAL GRINDING BAGHOUSE (EUMEALGRINDING)	JG	(YES) / NO	1801	4.94	0.5 - 10
PDT-50225-01	HULL STORAGE BIN 1 (EUHULLSTORAGE)	JG	(YES) / NO			0.2 - 5
PDT-50235-01	HULL STORAGE BIN 2 (EUHULLSTORAGE)	JG	(YES) / NO	1801	0.84	0.2 - 5
PDT-50245-01	HULL STORAGE BIN 3 (EUHULLSTORAGE)	JG	YES / (NO)			0.2 - 5
PDT-50255-01	HULL STORAGE BIN 4 (EUHULLSTORAGE)	JG	YES / (NO)			0.2 - 5

Comments:

DAILY DIFFERENTIAL PRESSURE READINGS
PREP

Date: 2/20/2022

Any units found to be outside of the designated operational limits need prompt reporting and corrective action.

DAY SHIFT READINGS

Supervisor: [signature]

Unit ID	Unit Name (Permit Emission Unit)	Operator Initials	Operating Today?	Time of Reading	Pressure Drop (in. W.C.)	
					Reading	Limit
PDT-20840-01	JET DRYER BAGHOUSE A (EUPREP)	PRS	(YES) / NO	0530	2.79	0.5 - 10
PDT-20940-01	JET DRYER BAGHOUSE B (EUPREP)	PRS	(YES) / NO	0530	1.79	0.5 - 10
PDT-21710-01	EXHAUST FILTER (EUPREP)	PRS	(YES) / NO	0531	5.76	0.5 - 10
PDT-21875-01	HULL GRINDING BAGHOUSE (EUHULLGRINDING)	PRS	(YES) / NO	0535	3.68	0.5 - 10
PDT-21690-01	MEAL GRINDING BAGHOUSE (EUMEALGRINDING)	PRS	(YES) / NO	0535	4.91	0.5 - 10
PDT-50225-01	HULL STORAGE BIN 1 (EUHULLSTORAGE)	PRS	YES / (NO)			0.2 - 5
PDT-50235-01	HULL STORAGE BIN 2 (EUHULLSTORAGE)		(YES) / NO	0524	0.87	0.2 - 5
PDT-50245-01	HULL STORAGE BIN 3 (EUHULLSTORAGE)	PRS	YES / (NO)			0.2 - 5
PDT-50255-01	HULL STORAGE BIN 4 (EUHULLSTORAGE)	PRS	YES / (NO)			0.2 - 5

NIGHT SHIFT READINGS

Supervisor: Thomas Hilsons

Unit ID	Unit Name (Permit Emission Unit)	Operator Initials	Operating Today?	Time of Reading	Pressure Drop (in. W.C.)	
					Reading	Limit
PDT-20840-01	JET DRYER BAGHOUSE A (EUPREP)	JM	(YES) / NO	1720	2.73	0.5 - 10
PDT-20940-01	JET DRYER BAGHOUSE B (EUPREP)	JM	(YES) / NO	1720	1.84	0.5 - 10
PDT-21710-01	EXHAUST FILTER (EUPREP)	JM	(YES) / NO	1720	3.85	0.5 - 10
PDT-21875-01	HULL GRINDING BAGHOUSE (EUHULLGRINDING)	JM	(YES) / NO	1720	3.71	0.5 - 10
PDT-21690-01	MEAL GRINDING BAGHOUSE (EUMEALGRINDING)	JM	(YES) / NO	1720	4.74	0.5 - 10
PDT-50225-01	HULL STORAGE BIN 1 (EUHULLSTORAGE)	JM	(YES) / NO	1720	0.94	0.2 - 5
PDT-50235-01	HULL STORAGE BIN 2 (EUHULLSTORAGE)	JM	YES / (NO)			0.2 - 5
PDT-50245-01	HULL STORAGE BIN 3 (EUHULLSTORAGE)	JM	YES / (NO)			0.2 - 5
PDT-50255-01	HULL STORAGE BIN 4 (EUHULLSTORAGE)	JM	YES / (NO)			0.2 - 5

Comments:

DAILY DIFFERENTIAL PRESSURE READINGS
PREP

Date: 2-21-22

Any units found to be outside of the designated operational limits need prompt reporting and corrective action.

DAY SHIFT READINGS

Supervisor: Bryan Mabry

Unit ID	Unit Name (Permit Emission Unit)	Operator Initials	Operating Today?	Time of Reading	Pressure Drop (in. W.C.)	
					Reading	Limit
PDT-20840-01	JET DRYER BAGHOUSE A (EUPREP)	VD	(YES) / NO	~~12~~.0541	2.87	0.5 - 10
PDT-20940-01	JET DRYER BAGHOUSE B (EUPREP)	VD	(YES) / NO	0541	1.73	0.5 - 10
PDT-21710-01	EXHAUST FILTER (EUPREP)	VD	(YES) / NO	0541	4.64	0.5 - 10
PDT-21875-01	HULL GRINDING BAGHOUSE (EUHULLGRINDING)	VD	(YES) / NO	0541	4.81	0.5 - 10
PDT-21690-01	MEAL GRINDING BAGHOUSE (EUMEALGRINDING)	VD	(YES) / NO	0541	3.82	0.5 - 10
PDT-50225-01	HULL STORAGE BIN 1 (EUHULLSTORAGE)	VD	(YES) / NO	0542	0.82	0.2 - 5
PDT-50235-01	HULL STORAGE BIN 2 (EUHULLSTORAGE)	VD	YES / (NO)			0.2 - 5
PDT-50245-01	HULL STORAGE BIN 3 (EUHULLSTORAGE)	VD	YES / (NO)			0.2 - 5
PDT-50255-01	HULL STORAGE BIN 4 (EUHULLSTORAGE)	VD	YES / (NO)			0.2 - 5

NIGHT SHIFT READINGS

Supervisor: [signature]

Unit ID	Unit Name (Permit Emission Unit)	Operator Initials	Operating Today?	Time of Reading	Pressure Drop (in. W.C.)	
					Reading	Limit
PDT-20840-01	JET DRYER BAGHOUSE A (EUPREP)	RC	(YES) / NO	1945	2.89	0.5 - 10
PDT-20940-01	JET DRYER BAGHOUSE B (EUPREP)	RC	(YES) / NO	1945	1.47	0.5 - 10
PDT-21710-01	EXHAUST FILTER (EUPREP)	RC	(YES) / NO	1945	4.85	0.5 - 10
PDT-21875-01	HULL GRINDING BAGHOUSE (EUHULLGRINDING)	RC	(YES) / NO	1945	2.94	0.5 - 10
PDT-21690-01	MEAL GRINDING BAGHOUSE (EUMEALGRINDING)	RC	(YES) / NO	1945	4.40	0.5 - 10
PDT-50225-01	HULL STORAGE BIN 1 (EUHULLSTORAGE)	RC	(YES) / NO	1945.	0.96	0.2 - 5
PDT-50235-01	HULL STORAGE BIN 2 (EUHULLSTORAGE)	RC	YES / (NO)			0.2 - 5
PDT-50245-01	HULL STORAGE BIN 3 (EUHULLSTORAGE)	RC	YES / (NO)			0.2 - 5
PDT-50255-01	HULL STORAGE BIN 4 (EUHULLSTORAGE)	RC	YES / (NO)			0.2 - 5

Comments:

DAILY DIFFERENTIAL PRESSURE READINGS
PREP

Date: 2/22/22

Any units found to be outside of the designated operational limits need prompt reporting and corrective action.

DAY SHIFT READINGS

Supervisor: Josh Heeer

Unit ID	Unit Name (Permit Emission Unit)	Operator Initials	Operating Today?	Time of Reading	Pressure Drop (in. W.C.)	
					Reading	Limit
PDT-20840-01	JET DRYER BAGHOUSE A (EUPREP)	BMO	(YES) / NO	0539	2.82	0.5 - 10
PDT-20940-01	JET DRYER BAGHOUSE B (EUPREP)	BMO	(YES) / NO	0539	1.85	0.5 - 10
PDT-21710-01	EXHAUST FILTER (EUPREP)	BMO	(YES) / NO	0539	5.03	0.5 - 10
PDT-21875-01	HULL GRINDING BAGHOUSE (EUHULLGRINDING)	BMO	(YES) / NO	0539	3.00	0.5 - 10
PDT-21690-01	MEAL GRINDING BAGHOUSE (EUMEALGRINDING)	BMO	(YES) / NO	0539	4.79	0.5 - 10
PDT-50225-01	HULL STORAGE BIN 1 (EUHULLSTORAGE)	BMO	(YES) / NO	0539	1.00	0.2 - 5
PDT-50235-01	HULL STORAGE BIN 2 (EUHULLSTORAGE)	BMO	YES / (NO)			0.2 - 5
PDT-50245-01	HULL STORAGE BIN 3 (EUHULLSTORAGE)	BMO	(YES) / NO	1211	0.99	0.2 - 5
PDT-50255-01	HULL STORAGE BIN 4 (EUHULLSTORAGE)	BMO	YES / (NO)			0.2 - 5

NIGHT SHIFT READINGS

Supervisor: Josh Heeer

Unit ID	Unit Name (Permit Emission Unit)	Operator Initials	Operating Today?	Time of Reading	Pressure Drop (in. W.C.)	
					Reading	Limit
PDT-20840-01	JET DRYER BAGHOUSE A (EUPREP)	RC	(YES) / NO	1710	2.91	0.5 - 10
PDT-20940-01	JET DRYER BAGHOUSE B (EUPREP)	RC	(YES) / NO	1710	1.77	0.5 - 10
PDT-21710-01	EXHAUST FILTER (EUPREP)	RC	(YES) / NO	1710	5.13	0.5 - 10
PDT-21875-01	HULL GRINDING BAGHOUSE (EUHULLGRINDING)	RC	(YES) / NO	1710	2.86	0.5 - 10
PDT-21690-01	MEAL GRINDING BAGHOUSE (EUMEALGRINDING)	RC	(YES) / NO	1710	5.09	0.5 - 10
PDT-50225-01	HULL STORAGE BIN 1 (EUHULLSTORAGE)	RC	YES / (NO)			0.2 - 5
PDT-50235-01	HULL STORAGE BIN 2 (EUHULLSTORAGE)	RC	YES / (NO)			0.2 - 5
PDT-50245-01	HULL STORAGE BIN 3 (EUHULLSTORAGE)	RC	(YES) / NO	1710	0.90	0.2 - 5
PDT-50255-01	HULL STORAGE BIN 4 (EUHULLSTORAGE)	RC	YES / (NO)			0.2 - 5

Comments:

DAILY DIFFERENTIAL PRESSURE READINGS
PREP

Date: 2/23/22

Any units found to be outside of the designated operational limits need prompt reporting and corrective action.

DAY SHIFT READINGS

Supervisor: Bryan Mo[illegible]

Unit ID	Unit Name (Permit Emission Unit)	Operator Initials	Operating Today?	Time of Reading	Pressure Drop (in. W.C.)	
					Reading	Limit
PDT-20840-01	JET DRYER BAGHOUSE A (EUPREP)	JF	(YES) / NO	0526	2.86	0.5 - 10
PDT-20940-01	JET DRYER BAGHOUSE B (EUPREP)	JF	(YES) / NO	0526	1.88	0.5 - 10
PDT-21710-01	EXHAUST FILTER (EUPREP)	JF	(YES) / NO	0526	4.68	0.5 - 10
PDT-21875-01	HULL GRINDING BAGHOUSE (EUHULLGRINDING)	JF	(YES) / NO	0526	3.47	0.5 - 10
PDT-21690-01	MEAL GRINDING BAGHOUSE (EUMEALGRINDING)	JF	(YES) / NO	0526	4.89	0.5 - 10
PDT-50225-01	HULL STORAGE BIN 1 (EUHULLSTORAGE)	JF	YES / (NO)			0.2 - 5
PDT-50235-01	HULL STORAGE BIN 2 (EUHULLSTORAGE)	JF	YES / (NO)			0.2 - 5
PDT-50245-01	HULL STORAGE BIN 3 (EUHULLSTORAGE)	JF	(YES) / NO	0527	0.89	0.2 - 5
PDT-50255-01	HULL STORAGE BIN 4 (EUHULLSTORAGE)	JF	(YES) / NO	0658	0.91	0.2 - 5

NIGHT SHIFT READINGS

Supervisor: Thomas Holmes

Unit ID	Unit Name (Permit Emission Unit)	Operator Initials	Operating Today?	Time of Reading	Pressure Drop (in. W.C.)	
					Reading	Limit
PDT-20840-01	JET DRYER BAGHOUSE A (EUPREP)	AJ	(YES) / NO	1727	3.01	0.5 - 10
PDT-20940-01	JET DRYER BAGHOUSE B (EUPREP)	AJ	(YES) / NO	1727	1.74	0.5 - 10
PDT-21710-01	EXHAUST FILTER (EUPREP)	AJ	(YES) / NO	1735	4.90	0.5 - 10
PDT-21875-01	HULL GRINDING BAGHOUSE (EUHULLGRINDING)	AJ	(YES) / NO	1735	3.02	0.5 - 10
PDT-21690-01	MEAL GRINDING BAGHOUSE (EUMEALGRINDING)	AJ	(YES) / NO	1735	4.81	0.5 - 10
PDT-50225-01	HULL STORAGE BIN 1 (EUHULLSTORAGE)	AJ	YES / (NO)			0.2 - 5
PDT-50235-01	HULL STORAGE BIN 2 (EUHULLSTORAGE)	AJ	YES / (NO)			0.2 - 5
PDT-50245-01	HULL STORAGE BIN 3 (EUHULLSTORAGE)	AJ	(YES) / NO	1736	0.83	0.2 - 5
PDT-50255-01	HULL STORAGE BIN 4 (EUHULLSTORAGE)	AJ	YES / (NO)			0.2 - 5

Comments:

DAILY DIFFERENTIAL PRESSURE READINGS
PREP

Date: 2/24/22

Any units found to be outside of the designated operational limits need prompt reporting and corrective action.

DAY SHIFT READINGS

Supervisor: Bryan McKee

Unit ID	Unit Name (Permit Emission Unit)	Operator Initials	Operating Today?	Time of Reading	Pressure Drop (in. W.C.)	
					Reading	Limit
PDT-20840-01	JET DRYER BAGHOUSE A (EUPREP)	PRS	(YES) / NO	0520	3.04	0.5 - 10
PDT-20940-01	JET DRYER BAGHOUSE B (EUPREP)	PRS	(YES) / NO	0522	2.10	0.5 - 10
PDT-21710-01	EXHAUST FILTER (EUPREP)	PRS	(YES) / NO	0525	4.98	0.5 - 10
PDT-21875-01	HULL GRINDING BAGHOUSE (EUHULLGRINDING)	PRS	(YES) / NO	0527	3.33	0.5 - 10
PDT-21690-01	MEAL GRINDING BAGHOUSE (EUMEALGRINDING)	PRS	(YES) / NO	0530	4.95	0.5 - 10
PDT-50225-01	HULL STORAGE BIN 1 (EUHULLSTORAGE)	PRS	YES / (NO)			0.2 - 5
PDT-50235-01	HULL STORAGE BIN 2 (EUHULLSTORAGE)	PRS	YES / (NO)			0.2 - 5
PDT-50245-01	HULL STORAGE BIN 3 (EUHULLSTORAGE)	PRS	(YES) / NO	0530	~~0.85~~ BMD	0.2 - 5
PDT-50255-01	HULL STORAGE BIN 4 (EUHULLSTORAGE)	PRS	YES / (NO)		0.85	0.2 - 5

NIGHT SHIFT READINGS

Supervisor: Johnny Williams

Unit ID	Unit Name (Permit Emission Unit)	Operator Initials	Operating Today?	Time of Reading	Pressure Drop (in. W.C.)	
					Reading	Limit
PDT-20840-01	JET DRYER BAGHOUSE A (EUPREP)	MP	(YES) / NO	1716	2.93	0.5 - 10
PDT-20940-01	JET DRYER BAGHOUSE B (EUPREP)	MP	(YES) / NO	1716	1.88	0.5 - 10
PDT-21710-01	EXHAUST FILTER (EUPREP)	MP	(YES) / NO	1716	4.92	0.5 - 10
PDT-21875-01	HULL GRINDING BAGHOUSE (EUHULLGRINDING)	MP	(YES) / NO	1716	3.15	0.5 - 10
PDT-21690-01	MEAL GRINDING BAGHOUSE (EUMEALGRINDING)	MP	(YES) / NO	1716	5.40	0.5 - 10
PDT-50225-01	HULL STORAGE BIN 1 (EUHULLSTORAGE)	TM	(YES) / NO	0130	1.11	0.2 - 5
PDT-50235-01	HULL STORAGE BIN 2 (EUHULLSTORAGE)	TM	YES / (NO)			0.2 - 5
PDT-50245-01	HULL STORAGE BIN 3 (EUHULLSTORAGE)	MP	(YES) / NO	1718	0.84	0.2 - 5
PDT-50255-01	HULL STORAGE BIN 4 (EUHULLSTORAGE)	TM	YES / (NO)			0.2 - 5

Comments:

DAILY DIFFERENTIAL PRESSURE READINGS
PREP

Date: 2-25-22

Any units found to be outside of the designated operational limits need prompt reporting and corrective action.

DAY SHIFT READINGS

Supervisor: Bryan M O'Keefe

Unit ID	Unit Name (Permit Emission Unit)	Operator Initials	Operating Today?	Time of Reading	Pressure Drop (in. W.C.)	
					Reading	Limit
PDT-20840-01	JET DRYER BAGHOUSE A (EUPREP)	AMS	YES / NO	1619	2.9	0.5 - 10
PDT-20940-01	JET DRYER BAGHOUSE B (EUPREP)	AMS	YES / NO	1619	1.77	0.5 - 10
PDT-21710-01	EXHAUST FILTER (EUPREP)	AMS	YES / NO	1620	4.97	0.5 - 10
PDT-21875-01	HULL GRINDING BAGHOUSE (EUHULLGRINDING)	AMS	YES / NO	1620	3.43	0.5 - 10
PDT-21690-01	MEAL GRINDING BAGHOUSE (EUMEALGRINDING)	AMS	YES / NO	1621	5.01	0.5 - 10
PDT-50225-01	HULL STORAGE BIN 1 (EUHULLSTORAGE)	AMS	YES / NO	0526	0.97	0.2 - 5
PDT-50235-01	HULL STORAGE BIN 2 (EUHULLSTORAGE)	AMS	YES / NO			0.2 - 5
PDT-50245-01	HULL STORAGE BIN 3 (EUHULLSTORAGE)	AMS	YES / NO			0.2 - 5
PDT-50255-01	HULL STORAGE BIN 4 (EUHULLSTORAGE)	AMS	YES / NO			0.2 - 5

NIGHT SHIFT READINGS

Supervisor: [signature]

Unit ID	Unit Name (Permit Emission Unit)	Operator Initials	Operating Today?	Time of Reading	Pressure Drop (in. W.C.)	
					Reading	Limit
PDT-20840-01	JET DRYER BAGHOUSE A (EUPREP)	RC	YES / NO	1730	2.91	0.5 - 10
PDT-20940-01	JET DRYER BAGHOUSE B (EUPREP)	RC	YES / NO	1730	1.78	0.5 - 10
PDT-21710-01	EXHAUST FILTER (EUPREP)	RC	YES / NO	1730	4.89	0.5 - 10
PDT-21875-01	HULL GRINDING BAGHOUSE (EUHULLGRINDING)	RC	YES / NO	1730	3.63	0.5 - 10
PDT-21690-01	MEAL GRINDING BAGHOUSE (EUMEALGRINDING)	RC	YES / NO	1730	5.03	0.5 - 10
PDT-50225-01	HULL STORAGE BIN 1 (EUHULLSTORAGE)	RC	YES / NO	1730	0.97	0.2 - 5
PDT-50235-01	HULL STORAGE BIN 2 (EUHULLSTORAGE)	RC	YES / NO			0.2 - 5
PDT-50245-01	HULL STORAGE BIN 3 (EUHULLSTORAGE)	RC	YES / NO			0.2 - 5
PDT-50255-01	HULL STORAGE BIN 4 (EUHULLSTORAGE)	RC	YES / NO			0.2 - 5

Comments:

DAILY DIFFERENTIAL PRESSURE READINGS
PREP

Date: 2-26-2022

Any units found to be outside of the designated operational limits need prompt reporting and corrective action.

DAY SHIFT READINGS

Supervisor: Bryan McKenzie

Unit ID	Unit Name (Permit Emission Unit)	Operator Initials	Operating Today?	Time of Reading	Pressure Drop (in. W.C.)	
					Reading	Limit
PDT-20840-01	JET DRYER BAGHOUSE A (EUPREP)	PMS	(YES) / NO	0507	2.91	0.5 - 10
PDT-20940-01	JET DRYER BAGHOUSE B (EUPREP)	PMS	(YES) / NO	0507	1.80	0.5 - 10
PDT-21710-01	EXHAUST FILTER (EUPREP)	PMS	(YES) / NO	0507	5.00	0.5 - 10
PDT-21875-01	HULL GRINDING BAGHOUSE (EUHULLGRINDING)	PMS	(YES) / NO	0507	4.38	0.5 - 10
PDT-21690-01	MEAL GRINDING BAGHOUSE (EUMEALGRINDING)	PMS	(YES) / NO	0507	5.03	0.5 - 10
PDT-50225-01	HULL STORAGE BIN 1 (EUHULLSTORAGE)	PMS	(YES) / NO	0507	1.01	0.2 - 5
PDT-50235-01	HULL STORAGE BIN 2 (EUHULLSTORAGE)	PMS	YES / (NO)			0.2 - 5
PDT-50245-01	HULL STORAGE BIN 3 (EUHULLSTORAGE)	PMS	YES / (NO)			0.2 - 5
PDT-50255-01	HULL STORAGE BIN 4 (EUHULLSTORAGE)	PMS	YES / (NO)			0.2 - 5

NIGHT SHIFT READINGS

Supervisor: [signature]

Unit ID	Unit Name (Permit Emission Unit)	Operator Initials	Operating Today?	Time of Reading	Pressure Drop (in. W.C.)	
					Reading	Limit
PDT-20840-01	JET DRYER BAGHOUSE A (EUPREP)	AJ	(YES) / NO	1717	2.91	0.5 - 10
PDT-20940-01	JET DRYER BAGHOUSE B (EUPREP)	AJ	(YES) / NO	1717	1.93	0.5 - 10
PDT-21710-01	EXHAUST FILTER (EUPREP)	AJ	(YES) / NO	1717	4.75	0.5 - 10
PDT-21875-01	HULL GRINDING BAGHOUSE (EUHULLGRINDING)	AJ	(YES) / NO	1718	3.07	0.5 - 10
PDT-21690-01	MEAL GRINDING BAGHOUSE (EUMEALGRINDING)	AJ	(YES) / NO	1718	4.69	0.5 - 10
PDT-50225-01	HULL STORAGE BIN 1 (EUHULLSTORAGE)	AJ	(YES) / NO	1719	1.02	0.2 - 5
PDT-50235-01	HULL STORAGE BIN 2 (EUHULLSTORAGE)	AJ	YES / (NO)			0.2 - 5
PDT-50245-01	HULL STORAGE BIN 3 (EUHULLSTORAGE)	AJ	YES / (NO)			0.2 - 5
PDT-50255-01	HULL STORAGE BIN 4 (EUHULLSTORAGE)	AJ	YES / (NO)			0.2 - 5

Comments:

DAILY DIFFERENTIAL PRESSURE READINGS
PREP

Date: 2-27-2022

Any units found to be outside of the designated operational limits need prompt reporting and corrective action.

DAY SHIFT READINGS

Supervisor: Bryan McKeefe

Unit ID	Unit Name (Permit Emission Unit)	Operator Initials	Operating Today?	Time of Reading	Pressure Drop (in. W.C.)	
					Reading	Limit
PDT-20840-01	JET DRYER BAGHOUSE A (EUPREP)	AMS	(YES) / NO	0509	2.83	0.5 - 10
PDT-20940-01	JET DRYER BAGHOUSE B (EUPREP)	AMS	(YES) / NO	0509	1.87	0.5 - 10
PDT-21710-01	EXHAUST FILTER (EUPREP)	AMS	(YES) / NO	0510	4.80	0.5 - 10
PDT-21875-01	HULL GRINDING BAGHOUSE (EUHULLGRINDING)	AMS	(YES) / NO	0510	3.18	0.5 - 10
PDT-21690-01	MEAL GRINDING BAGHOUSE (EUMEALGRINDING)	AMS	(YES) / NO	0511	4.93	0.5 - 10
PDT-50225-01	HULL STORAGE BIN 1 (EUHULLSTORAGE)	AMS	(YES) / NO	0508	1.03	0.2 - 5
PDT-50235-01	HULL STORAGE BIN 2 (EUHULLSTORAGE)	AMS	(YES) / NO	0845	1.17	0.2 - 5
PDT-50245-01	HULL STORAGE BIN 3 (EUHULLSTORAGE)	AMS	YES / (NO)			0.2 - 5
PDT-50255-01	HULL STORAGE BIN 4 (EUHULLSTORAGE)	AMS	YES / (NO)			0.2 - 5

NIGHT SHIFT READINGS

Supervisor: Joseph Heaser

Unit ID	Unit Name (Permit Emission Unit)	Operator Initials	Operating Today?	Time of Reading	Pressure Drop (in. W.C.)	
					Reading	Limit
PDT-20840-01	JET DRYER BAGHOUSE A (EUPREP)	RC	(YES) / NO	1730	2.88	0.5 - 10
PDT-20940-01	JET DRYER BAGHOUSE B (EUPREP)	RC	(YES) / NO	1730	1.81	0.5 - 10
PDT-21710-01	EXHAUST FILTER (EUPREP)	RC	(YES) / NO	1730	4.79	0.5 - 10
PDT-21875-01	HULL GRINDING BAGHOUSE (EUHULLGRINDING)	RC	(YES) / NO	1730	3.28	0.5 - 10
PDT-21690-01	MEAL GRINDING BAGHOUSE (EUMEALGRINDING)	RC	(YES) / NO	1730	4.69	0.5 - 10
PDT-50225-01	HULL STORAGE BIN 1 (EUHULLSTORAGE)	RC	YES / (NO)			0.2 - 5
PDT-50235-01	HULL STORAGE BIN 2 (EUHULLSTORAGE)	RC	(YES) / NO	1730	0.84	0.2 - 5
PDT-50245-01	HULL STORAGE BIN 3 (EUHULLSTORAGE)	RC	YES / (NO)			0.2 - 5
PDT-50255-01	HULL STORAGE BIN 4 (EUHULLSTORAGE)	RC	YES / (NO)			0.2 - 5

Comments:

DAILY DIFFERENTIAL PRESSURE READINGS
PREP

Date: 2-28-2022

Any units found to be outside of the designated operational limits need prompt reporting and corrective action.

DAY SHIFT READINGS

Supervisor: [signature]

Unit ID	Unit Name (Permit Emission Unit)	Operator Initials	Operating Today?	Time of Reading	Pressure Drop (in. W.C.)	
					Reading	Limit
PDT-20840-01	JET DRYER BAGHOUSE A (EUPREP)	JF	(YES) / NO	0600	2.98	0.5 - 10
PDT-20940-01	JET DRYER BAGHOUSE B (EUPREP)	JF	(YES) / NO	0600	1.74	0.5 - 10
PDT-21710-01	EXHAUST FILTER (EUPREP)	JF	(YES) / NO	0600	4.92	0.5 - 10
PDT-21875-01	HULL GRINDING BAGHOUSE (EUHULLGRINDING)	JF	(YES) / NO	0601	3.40	0.5 - 10
PDT-21690-01	MEAL GRINDING BAGHOUSE (EUMEALGRINDING)	JF	(YES) / NO	0601	4.59	0.5 - 10
PDT-50225-01	HULL STORAGE BIN 1 (EUHULLSTORAGE)	JF	YES / (NO)			0.2 - 5
PDT-50235-01	HULL STORAGE BIN 2 (EUHULLSTORAGE)	JF	(YES) / NO	0529	0.90	0.2 - 5
PDT-50245-01	HULL STORAGE BIN 3 (EUHULLSTORAGE)	JF	YES / (NO)			0.2 - 5
PDT-50255-01	HULL STORAGE BIN 4 (EUHULLSTORAGE)	JF	YES / (NO)			0.2 - 5

NIGHT SHIFT READINGS

Supervisor: [signature] Holmes

Unit ID	Unit Name (Permit Emission Unit)	Operator Initials	Operating Today?	Time of Reading	Pressure Drop (in. W.C.)	
					Reading	Limit
PDT-20840-01	JET DRYER BAGHOUSE A (EUPREP)	JM	(YES) / NO	1730	2.71	0.5 - 10
PDT-20940-01	JET DRYER BAGHOUSE B (EUPREP)	JM	(YES) / NO	1730	1.84	0.5 - 10
PDT-21710-01	EXHAUST FILTER (EUPREP)	JM	(YES) / NO	1730	4.96	0.5 - 10
PDT-21875-01	HULL GRINDING BAGHOUSE (EUHULLGRINDING)	JM	(YES) / NO	1730	3.79	0.5 - 10
PDT-21690-01	MEAL GRINDING BAGHOUSE (EUMEALGRINDING)	JM	(YES) / NO	1730	4.78	0.5 - 10
PDT-50225-01	HULL STORAGE BIN 1 (EUHULLSTORAGE)	JM	YES / (NO)			0.2 - 5
PDT-50235-01	HULL STORAGE BIN 2 (EUHULLSTORAGE)	JM	(YES) / NO	1730	0.91	0.2 - 5
PDT-50245-01	HULL STORAGE BIN 3 (EUHULLSTORAGE)	JM	YES / (NO)			0.2 - 5
PDT-50255-01	HULL STORAGE BIN 4 (EUHULLSTORAGE)	JM	YES / (NO)			0.2 - 5

Comments:

DAILY DIFFERENTIAL PRESSURE READINGS
PREP

Date: 08/01/2021

Any units found to be outside of the designated operational limits need prompt reporting and corrective action.

DAY SHIFT READINGS

Supervisor: Josh Heaver

Unit ID	Unit Name (Permit Emission Unit)	Operator Initials	Operating Today?	Time of Reading	Pressure Drop (in. W.C.)	
					Reading	Limit
PDT-20840-01	JET DRYER BAGHOUSE A (EUPREP)	BHD	(YES) / NO	0504	4.55	0.5 - 10
PDT-20940-01	JET DRYER BAGHOUSE B (EUPREP)	BHD	(YES) / NO	0504	3.00	0.5 - 10
PDT-21710-01	EXHAUST FILTER (EUPREP)	BHD	(YES) / NO	0504	3.44	0.5 - 10
PDT-21875-01	HULL GRINDING BAGHOUSE (EUHULLGRINDING)	BHD	(YES) / NO	0504	2.61	0.5 - 10
PDT-21690-01	MEAL GRINDING BAGHOUSE (EUMEALGRINDING)	BHD	(YES) / NO	0504	2.94	0.5 - 10
PDT-50225-01	HULL STORAGE BIN 1 (EUHULLSTORAGE)	BHD	YES / (NO)			0.2 - 5
PDT-50235-01	HULL STORAGE BIN 2 (EUHULLSTORAGE)	BHD	(YES) / NO	0529	1.26	0.2 - 5
PDT-50245-01	HULL STORAGE BIN 3 (EUHULLSTORAGE)	BHD	(YES) / NO	0505	1.33	0.2 - 5
PDT-50255-01	HULL STORAGE BIN 4 (EUHULLSTORAGE)	BHD	YES / (NO)			0.2 - 5

NIGHT SHIFT READINGS

Supervisor: Josh Heaver

Unit ID	Unit Name (Permit Emission Unit)	Operator Initials	Operating Today?	Time of Reading	Pressure Drop (in. W.C.)	
					Reading	Limit
PDT-20840-01	JET DRYER BAGHOUSE A (EUPREP)	JF	(YES) / NO	1750	4.72	0.5 - 10
PDT-20940-01	JET DRYER BAGHOUSE B (EUPREP)	JF	(YES) / NO	1750	3.90	0.5 - 10
PDT-21710-01	EXHAUST FILTER (EUPREP)	JF	(YES) / NO	1753	3.27	0.5 - 10
PDT-21875-01	HULL GRINDING BAGHOUSE (EUHULLGRINDING)	JF	(YES) / NO	1753	2.70	0.5 - 10
PDT-21690-01	MEAL GRINDING BAGHOUSE (EUMEALGRINDING)	JF	(YES) / NO	1755	2.89	0.5 - 10
PDT-50225-01	HULL STORAGE BIN 1 (EUHULLSTORAGE)	TH	YES / (NO)			0.2 - 5
PDT-50235-01	HULL STORAGE BIN 2 (EUHULLSTORAGE)	TH	(YES) / NO	1721	1.00	0.2 - 5
PDT-50245-01	HULL STORAGE BIN 3 (EUHULLSTORAGE)	TH	YES / (NO)			0.2 - 5
PDT-50255-01	HULL STORAGE BIN 4 (EUHULLSTORAGE)	TH	YES / (NO)			0.2 - 5

Comments:

DAILY DIFFERENTIAL PRESSURE READINGS
PREP

Date: 8-2-21

Any units found to be outside of the designated operational limits need prompt reporting and corrective action.

DAY SHIFT READINGS

Supervisor: Seth B

Unit ID	Unit Name (Permit Emission Unit)	Operator Initials	Operating Today?	Time of Reading	Pressure Drop (in. W.C.)	
					Reading	Limit
PDT-20840-01	JET DRYER BAGHOUSE A (EUPREP)	MW	(YES) / NO	0530	4.6	0.5 - 10
PDT-20940-01	JET DRYER BAGHOUSE B (EUPREP)	MW	(YES) / NO	0530	2.7	0.5 - 10
PDT-21710-01	EXHAUST FILTER (EUPREP)	MW	(YES) / NO	0530	2.8	0.5 - 10
PDT-21875-01	HULL GRINDING BAGHOUSE (EUHULLGRINDING)	MW	(YES) / NO	0530	2.1	0.5 - 10
PDT-21690-01	MEAL GRINDING BAGHOUSE (EUMEALGRINDING)	MW	(YES) / NO	0530	3.5	0.5 - 10
PDT-50225-01	HULL STORAGE BIN 1 (EUHULLSTORAGE)	MW	YES / (NO)			0.2 - 5
PDT-50235-01	HULL STORAGE BIN 2 (EUHULLSTORAGE)	MW	(YES) / NO	0530	.75	0.2 - 5
PDT-50245-01	HULL STORAGE BIN 3 (EUHULLSTORAGE)	MW	(YES) / NO	1300	1.43	0.2 - 5
PDT-50255-01	HULL STORAGE BIN 4 (EUHULLSTORAGE)	MW	YES / (NO)			0.2 - 5

NIGHT SHIFT READINGS

Supervisor: Thomas Holmes

Unit ID	Unit Name (Permit Emission Unit)	Operator Initials	Operating Today?	Time of Reading	Pressure Drop (in. W.C.)	
					Reading	Limit
PDT-20840-01	JET DRYER BAGHOUSE A (EUPREP)	MP	(YES) / NO	1717	4.34	0.5 - 10
PDT-20940-01	JET DRYER BAGHOUSE B (EUPREP)	MP	(YES) / NO	1717	4.07	0.5 - 10
PDT-21710-01	EXHAUST FILTER (EUPREP)	MP	(YES) / NO	1717	3.46	0.5 - 10
PDT-21875-01	HULL GRINDING BAGHOUSE (EUHULLGRINDING)	MP	(YES) / NO	1717	5.33	0.5 - 10
PDT-21690-01	MEAL GRINDING BAGHOUSE (EUMEALGRINDING)	MP	(YES) / NO	1717	2.83	0.5 - 10
PDT-50225-01	HULL STORAGE BIN 1 (EUHULLSTORAGE)	MP	YES / (NO)			0.2 - 5
PDT-50235-01	HULL STORAGE BIN 2 (EUHULLSTORAGE)	MP	(YES) / NO	1956	1.18	0.2 - 5
PDT-50245-01	HULL STORAGE BIN 3 (EUHULLSTORAGE)	TH	(YES) / NO	1709	1.11	0.2 - 5
PDT-50255-01	HULL STORAGE BIN 4 (EUHULLSTORAGE)	MP	YES / (NO)			0.2 - 5

Comments:

DAILY DIFFERENTIAL PRESSURE READINGS
PREP

Date: 8-3-21

Any units found to be outside of the designated operational limits need prompt reporting and corrective action.

DAY SHIFT READINGS

Supervisor: [signature]

Unit ID	Unit Name (Permit Emission Unit)	Operator Initials	Operating Today?	Time of Reading	Pressure Drop (in. W.C.)	
					Reading	Limit
PDT-20840-01	JET DRYER BAGHOUSE A (EUPREP)	MW	(YES) / NO	0530	4.5	0.5 - 10
PDT-20940-01	JET DRYER BAGHOUSE B (EUPREP)	MW	(YES) / NO	0530	2.8	0.5 - 10
PDT-21710-01	EXHAUST FILTER (EUPREP)	MW	(YES) / NO	0530	3.3	0.5 - 10
PDT-21875-01	HULL GRINDING BAGHOUSE (EUHULLGRINDING)	MW	(YES) / NO	0530	2.5	0.5 - 10
PDT-21690-01	MEAL GRINDING BAGHOUSE (EUMEALGRINDING)	MW	(YES) / NO	0530	3.0	0.5 - 10
PDT-50225-01	HULL STORAGE BIN 1 (EUHULLSTORAGE)	MW	YES / (NO)			0.2 - 5
PDT-50235-01	HULL STORAGE BIN 2 (EUHULLSTORAGE)	MW	(YES) / NO	0530	0.57	0.2 - 5
PDT-50245-01	HULL STORAGE BIN 3 (EUHULLSTORAGE)	MW	YES / (NO)			0.2 - 5
PDT-50255-01	HULL STORAGE BIN 4 (EUHULLSTORAGE)	MW	YES / (NO)			0.2 - 5

NIGHT SHIFT READINGS

Supervisor: [signature]

Unit ID	Unit Name (Permit Emission Unit)	Operator Initials	Operating Today?	Time of Reading	Pressure Drop (in. W.C.)	
					Reading	Limit
PDT-20840-01	JET DRYER BAGHOUSE A (EUPREP)	JM	(YES) / NO	1730	4.58	0.5 - 10
PDT-20940-01	JET DRYER BAGHOUSE B (EUPREP)	JM	(YES) / NO	1730	4.78	0.5 - 10
PDT-21710-01	EXHAUST FILTER (EUPREP)	JM	(YES) / NO	1730	3.29	0.5 - 10
PDT-21875-01	HULL GRINDING BAGHOUSE (EUHULLGRINDING)	JM	(YES) / NO	1730	2.71	0.5 - 10
PDT-21690-01	MEAL GRINDING BAGHOUSE (EUMEALGRINDING)	JM	(YES) / NO	1730	2.88	0.5 - 10
PDT-50225-01	HULL STORAGE BIN 1 (EUHULLSTORAGE)	JM	YES / (NO)			0.2 - 5
PDT-50235-01	HULL STORAGE BIN 2 (EUHULLSTORAGE)	[illegible]	(YES) / NO	0057	1.46	0.2 - 5
PDT-50245-01	HULL STORAGE BIN 3 (EUHULLSTORAGE)	[illegible]	(YES) / NO	1728	1.7	0.2 - 5
PDT-50255-01	HULL STORAGE BIN 4 (EUHULLSTORAGE)	JM	YES / (NO)			0.2 - 5

Comments:

DAILY DIFFERENTIAL PRESSURE READINGS
PREP

Date: 08/04/2021

Any units found to be outside of the designated operational limits need prompt reporting and corrective action.

DAY SHIFT READINGS

Supervisor: Thomas Holems

Unit ID	Unit Name (Permit Emission Unit)	Operator Initials	Operating Today?	Time of Reading	Pressure Drop (in. W.C.)	
					Reading	Limit
PDT-20840-01	JET DRYER BAGHOUSE A (EUPREP)	BHO	(YES) / NO	0542	4.62	0.5 - 10
PDT-20940-01	JET DRYER BAGHOUSE B (EUPREP)	BHO	(YES) / NO	0542	3.02	0.5 - 10
PDT-21710-01	EXHAUST FILTER (EUPREP)	BHO	(YES) / NO	0542	3.47	0.5 - 10
PDT-21875-01	HULL GRINDING BAGHOUSE (EUHULLGRINDING)	BHO	(YES) / NO	0542	2.70	0.5 - 10
PDT-21690-01	MEAL GRINDING BAGHOUSE (EUMEALGRINDING)	BHO	(YES) / NO	0543	3.06	0.5 - 10
PDT-50225-01	HULL STORAGE BIN 1 (EUHULLSTORAGE)	BHO	YES / (NO)			0.2 - 5
PDT-50235-01	HULL STORAGE BIN 2 (EUHULLSTORAGE)	BHO	(YES) / NO	0559	1.03	0.2 - 5
PDT-50245-01	HULL STORAGE BIN 3 (EUHULLSTORAGE)	BHO	(YES) / NO	0914	1.34	0.2 - 5
PDT-50255-01	HULL STORAGE BIN 4 (EUHULLSTORAGE)	BHO	(YES) / NO	0725	0.61	0.2 - 5

NIGHT SHIFT READINGS

Supervisor: [signature]

Unit ID	Unit Name (Permit Emission Unit)	Operator Initials	Operating Today?	Time of Reading	Pressure Drop (in. W.C.)	
					Reading	Limit
PDT-20840-01	JET DRYER BAGHOUSE A (EUPREP)	BAW	(YES) NO	1847	4.57	0.5 - 10
PDT-20940-01	JET DRYER BAGHOUSE B (EUPREP)	BAW	(YES) NO	1847	4.68	0.5 - 10
PDT-21710-01	EXHAUST FILTER (EUPREP)	BAW	(YES) / NO	1847	3.37	0.5 - 10
PDT-21875-01	HULL GRINDING BAGHOUSE (EUHULLGRINDING)	BAW	(YES) NO	1847	1.87	0.5 - 10
PDT-21690-01	MEAL GRINDING BAGHOUSE (EUMEALGRINDING)	BAW	(YES) / NO	1847	2.91	0.5 - 10
PDT-50225-01	HULL STORAGE BIN 1 (EUHULLSTORAGE)	BAW	YES / (NO)	~~1842~~ BAW		0.2 - 5
PDT-50235-01	HULL STORAGE BIN 2 (EUHULLSTORAGE)	J	(YES) / NO	1732	1.53	0.2 - 5
PDT-50245-01	HULL STORAGE BIN 3 (EUHULLSTORAGE)	BAW	(YES) / ~~NO~~	0806	1.57	0.2 - 5
PDT-50255-01	HULL STORAGE BIN 4 (EUHULLSTORAGE)	BAW	YES / (NO)	~~1847~~ BAW		0.2 - 5

Comments:

DAILY DIFFERENTIAL PRESSURE READINGS
PREP

Date: 08/05/2021

Any units found to be outside of the designated operational limits need prompt reporting and corrective action.

DAY SHIFT READINGS

Supervisor: [signature]

Unit ID	Unit Name (Permit Emission Unit)	Operator Initials	Operating Today?	Time of Reading	Pressure Drop (in. W.C.)	
					Reading	Limit
PDT-20840-01	JET DRYER BAGHOUSE A (EUPREP)	BMO	(YES) / NO	0526	4.63	0.5 - 10
PDT-20940-01	JET DRYER BAGHOUSE B (EUPREP)	BMO	(YES) / NO	0526	3.17	0.5 - 10
PDT-21710-01	EXHAUST FILTER (EUPREP)	BMO	(YES) / NO	0526	3.47	0.5 - 10
PDT-21875-01	HULL GRINDING BAGHOUSE (EUHULLGRINDING)	BMO	(YES) / NO	0526	1.86	0.5 - 10
PDT-21690-01	MEAL GRINDING BAGHOUSE (EUMEALGRINDING)	BMO	(YES) / NO	0526	3.05	0.5 - 10
PDT-50225-01	HULL STORAGE BIN 1 (EUHULLSTORAGE)	BMO	YES / (NO)			0.2 - 5
PDT-50235-01	HULL STORAGE BIN 2 (EUHULLSTORAGE)	BMO	(YES) / NO	0527	1.20	0.2 - 5
PDT-50245-01	HULL STORAGE BIN 3 (EUHULLSTORAGE)	BMO	(YES) / NO	0526	1.15	0.2 - 5
PDT-50255-01	HULL STORAGE BIN 4 (EUHULLSTORAGE)	BMO	YES / (NO)			0.2 - 5

NIGHT SHIFT READINGS

Supervisor: [signature]

Unit ID	Unit Name (Permit Emission Unit)	Operator Initials	Operating Today?	Time of Reading	Pressure Drop (in. W.C.)	
					Reading	Limit
PDT-20840-01	JET DRYER BAGHOUSE A (EUPREP)	JF	(YES) / NO	1720	4.56	0.5 - 10
PDT-20940-01	JET DRYER BAGHOUSE B (EUPREP)	JF	(YES) / NO	1720	5.01	0.5 - 10
PDT-21710-01	EXHAUST FILTER (EUPREP)	JF	(YES) / NO	1720	3.37	0.5 - 10
PDT-21875-01	HULL GRINDING BAGHOUSE (EUHULLGRINDING)	JF	(YES) / NO	1720	1.93	0.5 - 10
PDT-21690-01	MEAL GRINDING BAGHOUSE (EUMEALGRINDING)	JF	(YES) / NO	1720	2.86	0.5 - 10
PDT-50225-01	HULL STORAGE BIN 1 (EUHULLSTORAGE)	JF	YES / (NO)			0.2 - 5
PDT-50235-01	HULL STORAGE BIN 2 (EUHULLSTORAGE)	JF	(YES) / NO	1722	0.71	0.2 - 5
PDT-50245-01	HULL STORAGE BIN 3 (EUHULLSTORAGE)	JF	(YES) / NO	0330	1.11	0.2 - 5
PDT-50255-01	HULL STORAGE BIN 4 (EUHULLSTORAGE)	JF	YES / (NO)			0.2 - 5

Comments:

DAILY DIFFERENTIAL PRESSURE READINGS
PREP

Date: 8.6.21

Any units found to be outside of the designated operational limits need prompt reporting and corrective action.

DAY SHIFT READINGS

Supervisor: [signature]

Unit ID	Unit Name (Permit Emission Unit)	Operator Initials	Operating Today?	Time of Reading	Pressure Drop (in. W.C.)	
					Reading	Limit
PDT-20840-01	JET DRYER BAGHOUSE A (EUPREP)	JJ	(YES) / NO	0511	4.66	0.5 - 10
PDT-20940-01	JET DRYER BAGHOUSE B (EUPREP)	JJ	(YES) / NO	0511	3.37	0.5 - 10
PDT-21710-01	EXHAUST FILTER (EUPREP)	JJ	(YES) / NO	0511	3.51	0.5 - 10
PDT-21875-01	HULL GRINDING BAGHOUSE (EUHULLGRINDING)	JJ	(YES) / NO	0511	1.87	0.5 - 10
PDT-21690-01	MEAL GRINDING BAGHOUSE (EUMEALGRINDING)	JJ	(YES) / NO	0511	3.1	0.5 - 10
PDT-50225-01	HULL STORAGE BIN 1 (EUHULLSTORAGE)	JJ	YES / (NO)			0.2 - 5
PDT-50235-01	HULL STORAGE BIN 2 (EUHULLSTORAGE)	JJ	(YES) / NO	0755	0.63	0.2 - 5
PDT-50245-01	HULL STORAGE BIN 3 (EUHULLSTORAGE)	JJ	(YES) / NO	0511	0.79	0.2 - 5
PDT-50255-01	HULL STORAGE BIN 4 (EUHULLSTORAGE)	JJ	YES / (NO)			0.2 - 5

NIGHT SHIFT READINGS

Supervisor: [signature]

Unit ID	Unit Name (Permit Emission Unit)	Operator Initials	Operating Today?	Time of Reading	Pressure Drop (in. W.C.)		
					Reading	Limit	
PDT-20840-01	JET DRYER BAGHOUSE A (EUPREP)	MP	(YES) / NO	1828	4.73	0.5 - 10	
PDT-20940-01	JET DRYER BAGHOUSE B (EUPREP)	MP	(YES) / NO	1828	4.39	0.5 - 10	
PDT-21710-01	EXHAUST FILTER (EUPREP)	MP	(YES) / NO	1828	3.52	0.5 - 10	
PDT-21875-01	HULL GRINDING BAGHOUSE (EUHULLGRINDING)	MP	(YES) / NO	1828	2.54	0.5 - 10	
PDT-21690-01	MEAL GRINDING BAGHOUSE (EUMEALGRINDING)	MP	(YES) / NO	1828	3.04	0.5 - 10	
PDT-50225-01	HULL STORAGE BIN 1 (EUHULLSTORAGE)	MP	YES / (NO)			0.2 - 5	
PDT-50235-01	HULL STORAGE BIN 2 (EUHULLSTORAGE)	MP	~~YES~~ / (NO)	~~0755~~	~~0.63~~	0.2 - 5	SB
PDT-50245-01	HULL STORAGE BIN 3 (EUHULLSTORAGE)	MP	(YES) / NO	1752 ~~0541~~	0.63 ~~1.03~~	0.2 - 5	SB
PDT-50255-01	HULL STORAGE BIN 4 (EUHULLSTORAGE)	MP	YES / (NO)			0.2 - 5	

Comments:

DAILY DIFFERENTIAL PRESSURE READINGS
PREP

Date: 8.7.21

Any units found to be outside of the designated operational limits need prompt reporting and corrective action.

DAY SHIFT READINGS

Supervisor: [signature]

Unit ID	Unit Name (Permit Emission Unit)	Operator Initials	Operating Today?	Time of Reading	Pressure Drop (in. W.C.)	
					Reading	Limit
PDT-20840-01	JET DRYER BAGHOUSE A (EUPREP)	JJ	(YES) / NO	0747	4.65	0.5 - 10
PDT-20940-01	JET DRYER BAGHOUSE B (EUPREP)	JJ	(YES) / NO	0747	3.4	0.5 - 10
PDT-21710-01	EXHAUST FILTER (EUPREP)	JJ	(YES) / NO	0747	3.61	0.5 - 10
PDT-21875-01	HULL GRINDING BAGHOUSE (EUHULLGRINDING)	JJ	(YES) / NO	0747	2.62	0.5 - 10
PDT-21690-01	MEAL GRINDING BAGHOUSE (EUMEALGRINDING)	JJ	(YES) / NO	0747	2.9	0.5 - 10
PDT-50225-01	HULL STORAGE BIN 1 (EUHULLSTORAGE)	JJ	YES / (NO)			0.2 - 5
PDT-50235-01	HULL STORAGE BIN 2 (EUHULLSTORAGE)	JJ	(YES) / NO	0747	0.48	0.2 - 5
PDT-50245-01	HULL STORAGE BIN 3 (EUHULLSTORAGE)	JJ	(YES) / NO	0747	1.13	0.2 - 5
PDT-50255-01	HULL STORAGE BIN 4 (EUHULLSTORAGE)	JJ	YES / (NO)			0.2 - 5

NIGHT SHIFT READINGS

Supervisor: Thomas Edwards

Unit ID	Unit Name (Permit Emission Unit)	Operator Initials	Operating Today?	Time of Reading	Pressure Drop (in. W.C.)	
					Reading	Limit
PDT-20840-01	JET DRYER BAGHOUSE A (EUPREP)	JM	(YES) / NO	1730	4.78	0.5 - 10
PDT-20940-01	JET DRYER BAGHOUSE B (EUPREP)	JM	(YES) / NO	1730	5.02	0.5 - 10
PDT-21710-01	EXHAUST FILTER (EUPREP)	JM	(YES) / NO	1730	3.55	0.5 - 10
PDT-21875-01	HULL GRINDING BAGHOUSE (EUHULLGRINDING)	JM	(YES) / NO	1730	2.69	0.5 - 10
PDT-21690-01	MEAL GRINDING BAGHOUSE (EUMEALGRINDING)	JM	(YES) / NO	1730	3.01	0.5 - 10
PDT-50225-01	HULL STORAGE BIN 1 (EUHULLSTORAGE)	JM	YES / (NO)			0.2 - 5
PDT-50235-01	HULL STORAGE BIN 2 (EUHULLSTORAGE)	TH	(YES) / NO	1716	0.68	0.2 - 5
PDT-50245-01	HULL STORAGE BIN 3 (EUHULLSTORAGE)	JM	YES / (NO)			0.2 - 5
PDT-50255-01	HULL STORAGE BIN 4 (EUHULLSTORAGE)	JM	YES / (NO)			0.2 - 5

Comments:

DAILY DIFFERENTIAL PRESSURE READINGS
PREP

Date: 08/08/2021

Any units found to be outside of the designated operational limits need prompt reporting and corrective action.

DAY SHIFT READINGS

Supervisor: [signature]

Unit ID	Unit Name (Permit Emission Unit)	Operator Initials	Operating Today?	Time of Reading	Pressure Drop (in. W.C.)	
					Reading	Limit
PDT-20840-01	JET DRYER BAGHOUSE A (EUPREP)	BMO	(YES) / NO	0540	4.57	0.5 - 10
PDT-20940-01	JET DRYER BAGHOUSE B (EUPREP)	BMO	(YES) / NO	0540	3.59	0.5 - 10
PDT-21710-01	EXHAUST FILTER (EUPREP)	BMO	(YES) / NO	0540	3.71	0.5 - 10
PDT-21875-01	HULL GRINDING BAGHOUSE (EUHULLGRINDING)	BMO	(YES) / NO	0540	2.95	0.5 - 10
PDT-21690-01	MEAL GRINDING BAGHOUSE (EUMEALGRINDING)	BMO	(YES) / NO	0540	3.19	0.5 - 10
PDT-50225-01	HULL STORAGE BIN 1 (EUHULLSTORAGE)	BMO	YES / (NO)			0.2 - 5
PDT-50235-01	HULL STORAGE BIN 2 (EUHULLSTORAGE)	BMO	(YES) / NO	0545	1.30	0.2 - 5
PDT-50245-01	HULL STORAGE BIN 3 (EUHULLSTORAGE)	BMO	(YES) / NO	1142	1.19	0.2 - 5
PDT-50255-01	HULL STORAGE BIN 4 (EUHULLSTORAGE)	BMO	YES / (NO)			0.2 - 5

NIGHT SHIFT READINGS

Supervisor: Thomas Adams

Unit ID	Unit Name (Permit Emission Unit)	Operator Initials	Operating Today?	Time of Reading	Pressure Drop (in. W.C.)	
					Reading	Limit
PDT-20840-01	JET DRYER BAGHOUSE A (EUPREP)	MP	(YES) / NO	1711	4.50	0.5 - 10
PDT-20940-01	JET DRYER BAGHOUSE B (EUPREP)	MP	(YES) / NO	1711	5.34	0.5 - 10
PDT-21710-01	EXHAUST FILTER (EUPREP)	MP	(YES) / NO	1711	3.66	0.5 - 10
PDT-21875-01	HULL GRINDING BAGHOUSE (EUHULLGRINDING)	MP	(YES) / NO	1711	4.20	0.5 - 10
PDT-21690-01	MEAL GRINDING BAGHOUSE (EUMEALGRINDING)	MP	(YES) / NO	1711	3.08	0.5 - 10
PDT-50225-01	HULL STORAGE BIN 1 (EUHULLSTORAGE)	MP	YES / (NO)			0.2 - 5
PDT-50235-01	HULL STORAGE BIN 2 (EUHULLSTORAGE)	MP	YES / (NO)			0.2 - 5
PDT-50245-01	HULL STORAGE BIN 3 (EUHULLSTORAGE)	TM	(YES) / NO	1703	1.55	0.2 - 5
PDT-50255-01	HULL STORAGE BIN 4 (EUHULLSTORAGE)	MP	YES / (NO)			0.2 - 5

Comments:

DAILY DIFFERENTIAL PRESSURE READINGS
PREP

Date: 08/09/2021

Any units found to be outside of the designated operational limits need prompt reporting and corrective action.

DAY SHIFT READINGS

Supervisor: Joseph Heaser

Unit ID	Unit Name (Permit Emission Unit)	Operator Initials	Operating Today?	Time of Reading	Pressure Drop (in. W.C.)	
					Reading	Limit
PDT-20840-01	JET DRYER BAGHOUSE A (EUPREP)	BNO	(YES) / NO	0503	4.57	0.5 - 10
PDT-20940-01	JET DRYER BAGHOUSE B (EUPREP)	BNO	(YES) / NO	0503	4.07	0.5 - 10
PDT-21710-01	EXHAUST FILTER (EUPREP)	BNO	(YES) / NO	0503	3.71	0.5 - 10
PDT-21875-01	HULL GRINDING BAGHOUSE (EUHULLGRINDING)	BNO	(YES) / NO	0503	3.12	0.5 - 10
PDT-21690-01	MEAL GRINDING BAGHOUSE (EUMEALGRINDING)	BNO	(YES) / NO	0503	3.10	0.5 - 10
PDT-50225-01	HULL STORAGE BIN 1 (EUHULLSTORAGE)	BNO	YES / (NO)			0.2 - 5
PDT-50235-01	HULL STORAGE BIN 2 (EUHULLSTORAGE)	BNO	(YES) / NO	0836	1.49	0.2 - 5
PDT-50245-01	HULL STORAGE BIN 3 (EUHULLSTORAGE)	BNO	(YES) / NO	0503	1.41	0.2 - 5
PDT-50255-01	HULL STORAGE BIN 4 (EUHULLSTORAGE)	BNO	YES / (NO)			0.2 - 5

NIGHT SHIFT READINGS

Supervisor: J Brown

Unit ID	Unit Name (Permit Emission Unit)	Operator Initials	Operating Today?	Time of Reading	Pressure Drop (in. W.C.)	
					Reading	Limit
PDT-20840-01	JET DRYER BAGHOUSE A (EUPREP)	BJW	(YES) / NO	1840	4.62	0.5 - 10
PDT-20940-01	JET DRYER BAGHOUSE B (EUPREP)	BJW	(YES) / NO	1840	4.52	0.5 - 10
PDT-21710-01	EXHAUST FILTER (EUPREP)	BJW	(YES) / NO	1840	3.68	0.5 - 10
PDT-21875-01	HULL GRINDING BAGHOUSE (EUHULLGRINDING)	BJW	(YES) / NO	1840		0.5 - 10
PDT-21690-01	MEAL GRINDING BAGHOUSE (EUMEALGRINDING)	BJW	(YES) / NO	1840	3.21	0.5 - 10
PDT-50225-01	HULL STORAGE BIN 1 (EUHULLSTORAGE)	BJW	YES / (NO)			0.2 - 5
PDT-50235-01	HULL STORAGE BIN 2 (EUHULLSTORAGE)	BJW	(YES) / NO	2241	0.66	0.2 - 5
PDT-50245-01	HULL STORAGE BIN 3 (EUHULLSTORAGE)	J	(YES) / NO	1735	1.35	0.2 - 5
PDT-50255-01	HULL STORAGE BIN 4 (EUHULLSTORAGE)	BJW	YES / (NO)			0.2 - 5

Comments:

DAILY DIFFERENTIAL PRESSURE READINGS
PREP

Date: 08/10/2021

Any units found to be outside of the designated operational limits need prompt reporting and corrective action.

DAY SHIFT READINGS

Supervisor: [signature]

Unit ID	Unit Name (Permit Emission Unit)	Operator Initials	Operating Today?	Time of Reading	Pressure Drop (in. W.C.)	
					Reading	Limit
PDT-20840-01	JET DRYER BAGHOUSE A (EUPREP)	BMO	(YES) / NO	0505	4.39	0.5 - 10
PDT-20940-01	JET DRYER BAGHOUSE B (EUPREP)	BMO	(YES) / NO	0505	4.00	0.5 - 10
PDT-21710-01	EXHAUST FILTER (EUPREP)	BMO	(YES) / NO	0505	3.70	0.5 - 10
PDT-21875-01	HULL GRINDING BAGHOUSE (EUHULLGRINDING)	BMO	(YES) / NO	0509	2.25	0.5 - 10
PDT-21690-01	MEAL GRINDING BAGHOUSE (EUMEALGRINDING)	BMO	(YES) / NO	0509	3.25	0.5 - 10
PDT-50225-01	HULL STORAGE BIN 1 (EUHULLSTORAGE)	BMO	YES / (NO)			0.2 - 5
PDT-50235-01	HULL STORAGE BIN 2 (EUHULLSTORAGE)	BMO	(YES) / NO	0933	1.80	0.2 - 5
PDT-50245-01	HULL STORAGE BIN 3 (EUHULLSTORAGE)	BMO	(YES) / NO	0510	1.44	0.2 - 5
PDT-50255-01	HULL STORAGE BIN 4 (EUHULLSTORAGE)	BMO	YES / (NO)			0.2 - 5

NIGHT SHIFT READINGS

Supervisor: [signature]

Unit ID	Unit Name (Permit Emission Unit)	Operator Initials	Operating Today?	Time of Reading	Pressure Drop (in. W.C.)	
					Reading	Limit
PDT-20840-01	JET DRYER BAGHOUSE A (EUPREP)	JF	(YES) / NO	1715	4.30	0.5 - 10
PDT-20940-01	JET DRYER BAGHOUSE B (EUPREP)	JF	(YES) / NO	1715	5.47	0.5 - 10
PDT-21710-01	EXHAUST FILTER (EUPREP)	JF	(YES) / NO	1716	3.68	0.5 - 10
PDT-21875-01	HULL GRINDING BAGHOUSE (EUHULLGRINDING)	JF	(YES) / NO	1716	2.40	0.5 - 10
PDT-21690-01	MEAL GRINDING BAGHOUSE (EUMEALGRINDING)	JF	(YES) / NO	1717	3.07	0.5 - 10
PDT-50225-01	HULL STORAGE BIN 1 (EUHULLSTORAGE)	JF	YES / (NO)			0.2 - 5
PDT-50235-01	HULL STORAGE BIN 2 (EUHULLSTORAGE)	JF	(YES) / NO	1721	0.63	0.2 - 5
PDT-50245-01	HULL STORAGE BIN 3 (EUHULLSTORAGE)	[illegible]	(YES) / NO	1819	-.83	0.2 - 5
PDT-50255-01	HULL STORAGE BIN 4 (EUHULLSTORAGE)	JF	YES / (NO)			0.2 - 5

Comments:

DAILY DIFFERENTIAL PRESSURE READINGS
PREP

Date: 8-11-2021

Any units found to be outside of the designated operational limits need prompt reporting and corrective action.

DAY SHIFT READINGS

Supervisor: [signature]

Unit ID	Unit Name (Permit Emission Unit)	Operator Initials	Operating Today?	Time of Reading	Pressure Drop (in. W.C.)	
					Reading	Limit
PDT-20840-01	JET DRYER BAGHOUSE A (EUPREP)	JZC	(YES) / NO	0530	4.45	0.5 - 10
PDT-20940-01	JET DRYER BAGHOUSE B (EUPREP)	JZC	(YES) / NO	0530	3.78	0.5 - 10
PDT-21710-01	EXHAUST FILTER (EUPREP)	JZC	(YES) / NO	0530	3.74	0.5 - 10
PDT-21875-01	HULL GRINDING BAGHOUSE (EUHULLGRINDING)	JZC	(YES) / NO	0530	2.53	0.5 - 10
PDT-21690-01	MEAL GRINDING BAGHOUSE (EUMEALGRINDING)	JZC	(YES) / NO	0530	3.20	0.5 - 10
PDT-50225-01	HULL STORAGE BIN 1 (EUHULLSTORAGE)	JZC	(YES) / NO	1150 ~~0530~~	0.34 ~~5.91~~	0.2 - 5 JZC
PDT-50235-01	HULL STORAGE BIN 2 (EUHULLSTORAGE)	JZC	(YES) / NO	0530 ~~0950~~	0.59 ~~1.22~~	0.2 - 5 JZC
PDT-50245-01	HULL STORAGE BIN 3 (EUHULLSTORAGE)	JZC	(YES) / NO	0950	1.22	0.2 - 5
PDT-50255-01	HULL STORAGE BIN 4 (EUHULLSTORAGE)	JZC	YES / (NO)			0.2 - 5

NIGHT SHIFT READINGS

Supervisor: [signature]

Unit ID	Unit Name (Permit Emission Unit)	Operator Initials	Operating Today?	Time of Reading	Pressure Drop (in. W.C.)	
					Reading	Limit
PDT-20840-01	JET DRYER BAGHOUSE A (EUPREP)	MP	(YES) / NO	1701	4.50	0.5 - 10
PDT-20940-01	JET DRYER BAGHOUSE B (EUPREP)	MP	(YES) / NO	1701	4.59	0.5 - 10
PDT-21710-01	EXHAUST FILTER (EUPREP)	MP	(YES) / NO	1702	3.78	0.5 - 10
PDT-21875-01	HULL GRINDING BAGHOUSE (EUHULLGRINDING)	MP	(YES) / NO	1702	6.31	0.5 - 10
PDT-21690-01	MEAL GRINDING BAGHOUSE (EUMEALGRINDING)	MP	(YES) / NO	1702	3.19	0.5 - 10
PDT-50225-01	HULL STORAGE BIN 1 (EUHULLSTORAGE)	MP	YES / (NO)			0.2 - 5
PDT-50235-01	HULL STORAGE BIN 2 (EUHULLSTORAGE)	MP	(YES) / NO	2340	0.67	0.2 - 5
PDT-50245-01	HULL STORAGE BIN 3 (EUHULLSTORAGE)	TH	(YES) / NO	1701	0.97	0.2 - 5
PDT-50255-01	HULL STORAGE BIN 4 (EUHULLSTORAGE)	MP	YES / (NO)			0.2 - 5

Comments:

DAILY DIFFERENTIAL PRESSURE READINGS
PREP

Date: 8-12-2021

Any units found to be outside of the designated operational limits need prompt reporting and corrective action.

DAY SHIFT READINGS

Supervisor: Seth B

Unit ID	Unit Name (Permit Emission Unit)	Operator Initials	Operating Today?	Time of Reading	Pressure Drop (in. W.C.)	
					Reading	Limit
PDT-20840-01	JET DRYER BAGHOUSE A (EUPREP)	JZC	(YES) / NO	0845	4.51	0.5 - 10
PDT-20940-01	JET DRYER BAGHOUSE B (EUPREP)	JZC	(YES) / NO	0845	3.91	0.5 - 10
PDT-21710-01	EXHAUST FILTER (EUPREP)	JZC	(YES) / NO	0845	3.81	0.5 - 10
PDT-21875-01	HULL GRINDING BAGHOUSE (EUHULLGRINDING)	JZC	(YES) / NO	0845	2.64	0.5 - 10
PDT-21690-01	MEAL GRINDING BAGHOUSE (EUMEALGRINDING)	JZC	(YES) / NO	0845	3.27	0.5 - 10
PDT-50225-01	HULL STORAGE BIN 1 (EUHULLSTORAGE)	JZC	YES / (NO)			0.2 - 5
PDT-50235-01	HULL STORAGE BIN 2 (EUHULLSTORAGE)	JZC	(YES) / NO	0845	0.67	0.2 - 5
PDT-50245-01	HULL STORAGE BIN 3 (EUHULLSTORAGE)	JZC	(YES) / NO	1300	0.71	0.2 - 5
PDT-50255-01	HULL STORAGE BIN 4 (EUHULLSTORAGE)	JZC	YES / (NO)			0.2 - 5

NIGHT SHIFT READINGS

Supervisor: Thomas Holcomb

Unit ID	Unit Name (Permit Emission Unit)	Operator Initials	Operating Today?	Time of Reading	Pressure Drop (in. W.C.)	
					Reading	Limit
PDT-20840-01	JET DRYER BAGHOUSE A (EUPREP)	MP	(YES) / NO	1713	4.51	0.5 - 10
PDT-20940-01	JET DRYER BAGHOUSE B (EUPREP)	MP	(YES) / NO	1713	5.35	0.5 - 10
PDT-21710-01	EXHAUST FILTER (EUPREP)	MP	(YES) / NO	1713	3.73	0.5 - 10
PDT-21875-01	HULL GRINDING BAGHOUSE (EUHULLGRINDING)	MP	(YES) / NO	1714	2.53	0.5 - 10
PDT-21690-01	MEAL GRINDING BAGHOUSE (EUMEALGRINDING)	MP	(YES) / NO	1714	2.90	0.5 - 10
PDT-50225-01	HULL STORAGE BIN 1 (EUHULLSTORAGE)	MP	YES / (NO)			0.2 - 5
PDT-50235-01	HULL STORAGE BIN 2 (EUHULLSTORAGE)	MP	(YES) / NO	1712	0.77	0.2 - 5
PDT-50245-01	HULL STORAGE BIN 3 (EUHULLSTORAGE)	MP	(YES) / NO	0033	1.34	0.2 - 5
PDT-50255-01	HULL STORAGE BIN 4 (EUHULLSTORAGE)	MP	YES / (NO)			0.2 - 5

Comments:

DAILY DIFFERENTIAL PRESSURE READINGS
PREP

Date: 08/13/2021

Any units found to be outside of the designated operational limits need prompt reporting and corrective action.

DAY SHIFT READINGS

Supervisor: [signature]

Unit ID	Unit Name (Permit Emission Unit)	Operator Initials	Operating Today?	Time of Reading	Pressure Drop (in. W.C.)	
					Reading	Limit
PDT-20840-01	JET DRYER BAGHOUSE A (EUPREP)	BMO	(YES) / NO	0516	4.44	0.5 - 10
PDT-20940-01	JET DRYER BAGHOUSE B (EUPREP)	BMO	(YES) / NO	0516	3.81	0.5 - 10
PDT-21710-01	EXHAUST FILTER (EUPREP)	BMO	(YES) / NO	0516	3.78	0.5 - 10
PDT-21875-01	HULL GRINDING BAGHOUSE (EUHULLGRINDING)	BMO	(YES) / NO	0516	2.54	0.5 - 10
PDT-21690-01	MEAL GRINDING BAGHOUSE (EUMEALGRINDING)	BMO	(YES) / NO	0516	3.17	0.5 - 10
PDT-50225-01	HULL STORAGE BIN 1 (EUHULLSTORAGE)	BMO	YES / (NO)			0.2 - 5
PDT-50235-01	HULL STORAGE BIN 2 (EUHULLSTORAGE)	BMO	(YES) / NO	0516	1.46	0.2 - 5
PDT-50245-01	HULL STORAGE BIN 3 (EUHULLSTORAGE)	BMO	(YES) / NO	0610	1.02	0.2 - 5
PDT-50255-01	HULL STORAGE BIN 4 (EUHULLSTORAGE)	BMO	YES / (NO)			0.2 - 5

NIGHT SHIFT READINGS

Supervisor: [signature]

Unit ID	Unit Name (Permit Emission Unit)	Operator Initials	Operating Today?	Time of Reading	Pressure Drop (in. W.C.)	
					Reading	Limit
PDT-20840-01	JET DRYER BAGHOUSE A (EUPREP)	BAW	(YES) / NO	1835	4.54	0.5 - 10
PDT-20940-01	JET DRYER BAGHOUSE B (EUPREP)	BAW	(YES) / NO	1835	4.54	0.5 - 10
PDT-21710-01	EXHAUST FILTER (EUPREP)	BAW	(YES) / NO	1835	3.76	0.5 - 10
PDT-21875-01	HULL GRINDING BAGHOUSE (EUHULLGRINDING)	BAW	(YES) / NO	1835	2.21	0.5 - 10
PDT-21690-01	MEAL GRINDING BAGHOUSE (EUMEALGRINDING)	BAW	(YES) / NO	1835	2.71	0.5 - 10
PDT-50225-01	HULL STORAGE BIN 1 (EUHULLSTORAGE)	BAW	YES / (NO)			0.2 - 5
PDT-50235-01	HULL STORAGE BIN 2 (EUHULLSTORAGE)	BAW	(YES) / NO	1835	0.62	0.2 - 5
PDT-50245-01	HULL STORAGE BIN 3 (EUHULLSTORAGE)	BAW	(YES) / NO	2100	1.13	0.2 - 5
PDT-50255-01	HULL STORAGE BIN 4 (EUHULLSTORAGE)	BAW	YES / (NO)			0.2 - 5

Comments:

DAILY DIFFERENTIAL PRESSURE READINGS
PREP

Date: 8-14-21

Any units found to be outside of the designated operational limits need prompt reporting and corrective action.

DAY SHIFT READINGS

Supervisor: [signature]

Unit ID	Unit Name (Permit Emission Unit)	Operator Initials	Operating Today?	Time of Reading	Pressure Drop (in. W.C.)	
					Reading	Limit
PDT-20840-01	JET DRYER BAGHOUSE A (EUPREP)	KD	(YES) / NO	0531	4.54	0.5 - 10
PDT-20940-01	JET DRYER BAGHOUSE B (EUPREP)	KD	(YES) / NO	0532	3.05	0.5 - 10
PDT-21710-01	EXHAUST FILTER (EUPREP)	KD	(YES) / NO	0532	3.83	0.5 - 10
PDT-21875-01	HULL GRINDING BAGHOUSE (EUHULLGRINDING)	KD	(YES) / NO	0532	2.39	0.5 - 10
PDT-21690-01	MEAL GRINDING BAGHOUSE (EUMEALGRINDING)	KD	(YES) / NO	0533	3.09	0.5 - 10
PDT-50225-01	HULL STORAGE BIN 1 (EUHULLSTORAGE)	BMD	YES / (NO)	0 -		0.2 - 5
PDT-50235-01	HULL STORAGE BIN 2 (EUHULLSTORAGE)	BMD	(YES) / NO	0627	1.38	0.2 - 5
PDT-50245-01	HULL STORAGE BIN 3 (EUHULLSTORAGE)	KD	(YES) / NO	0534	1.21	0.2 - 5
PDT-50255-01	HULL STORAGE BIN 4 (EUHULLSTORAGE)	BMD	YES / (NO)			0.2 - 5

NIGHT SHIFT READINGS

Supervisor: [signature]

Unit ID	Unit Name (Permit Emission Unit)	Operator Initials	Operating Today?	Time of Reading	Pressure Drop (in. W.C.)	
					Reading	Limit
PDT-20840-01	JET DRYER BAGHOUSE A (EUPREP)	JF	(YES) / NO	1715	4.62	0.5 - 10
PDT-20940-01	JET DRYER BAGHOUSE B (EUPREP)	JF	(YES) / NO	1715	4.81	0.5 - 10
PDT-21710-01	EXHAUST FILTER (EUPREP)	JF	(YES) / NO	1716	3.82	0.5 - 10
PDT-21875-01	HULL GRINDING BAGHOUSE (EUHULLGRINDING)	JF	(YES) / NO	1716	2.37	0.5 - 10
PDT-21690-01	MEAL GRINDING BAGHOUSE (EUMEALGRINDING)	JF	(YES) / NO	1717	2.84	0.5 - 10
PDT-50225-01	HULL STORAGE BIN 1 (EUHULLSTORAGE)	JF	YES / (NO)			0.2 - 5
PDT-50235-01	HULL STORAGE BIN 2 (EUHULLSTORAGE)	JF	YES / (NO)			0.2 - 5
PDT-50245-01	HULL STORAGE BIN 3 (EUHULLSTORAGE)	JF	(YES) / NO	1717	1.15	0.2 - 5
PDT-50255-01	HULL STORAGE BIN 4 (EUHULLSTORAGE)	JF	YES / (NO)			0.2 - 5

Comments:

DAILY DIFFERENTIAL PRESSURE READINGS
PREP

Date: 08/15/2021

Any units found to be outside of the designated operational limits need prompt reporting and corrective action.

DAY SHIFT READINGS

Supervisor: J. Lee

Unit ID	Unit Name (Permit Emission Unit)	Operator Initials	Operating Today?	Time of Reading	Pressure Drop (in. W.C.)	
					Reading	Limit
PDT-20840-01	JET DRYER BAGHOUSE A (EUPREP)	BNO	(YES) / NO	0533	4.76	0.5 - 10
PDT-20940-01	JET DRYER BAGHOUSE B (EUPREP)	BNO	(YES) / NO	0533	3.12	0.5 - 10
PDT-21710-01	EXHAUST FILTER (EUPREP)	BNO	(YES) / NO	0533	3.83	0.5 - 10
PDT-21875-01	HULL GRINDING BAGHOUSE (EUHULLGRINDING)	BNO	(YES) / NO	0533	2.44	0.5 - 10
PDT-21690-01	MEAL GRINDING BAGHOUSE (EUMEALGRINDING)	BNO	(YES) / NO	0533	3.15	0.5 - 10
PDT-50225-01	HULL STORAGE BIN 1 (EUHULLSTORAGE)	BNO	YES / (NO)			0.2 - 5
PDT-50235-01	HULL STORAGE BIN 2 (EUHULLSTORAGE)	BNO	(YES) / NO	1454	1.16	0.2 - 5
PDT-50245-01	HULL STORAGE BIN 3 (EUHULLSTORAGE)	BNO	(YES) / NO	0533	1.33	0.2 - 5
PDT-50255-01	HULL STORAGE BIN 4 (EUHULLSTORAGE)	BNO	YES / (NO)			0.2 - 5

NIGHT SHIFT READINGS

Supervisor: J. Lee

Unit ID	Unit Name (Permit Emission Unit)	Operator Initials	Operating Today?	Time of Reading	Pressure Drop (in. W.C.)	
					Reading	Limit
PDT-20840-01	JET DRYER BAGHOUSE A (EUPREP)	BAW	(YES) / NO	1916	4.63	0.5 - 10
PDT-20940-01	JET DRYER BAGHOUSE B (EUPREP)	BAW	(YES) / NO	1916	4.96	0.5 - 10
PDT-21710-01	EXHAUST FILTER (EUPREP)	BAW	(YES) / NO	1916	3.81	0.5 - 10
PDT-21875-01	HULL GRINDING BAGHOUSE (EUHULLGRINDING)	BAW	(YES) / NO	1916	2.53	0.5 - 10
PDT-21690-01	MEAL GRINDING BAGHOUSE (EUMEALGRINDING)	BAW	(YES) / NO	1916	2.89	0.5 - 10
PDT-50225-01	HULL STORAGE BIN 1 (EUHULLSTORAGE)	BAW	YES / (NO)			0.2 - 5
PDT-50235-01	HULL STORAGE BIN 2 (EUHULLSTORAGE)	BAW	(YES) / NO	1916	0.74	0.2 - 5
PDT-50245-01	HULL STORAGE BIN 3 (EUHULLSTORAGE)	BAW	YES / (NO)			0.2 - 5
PDT-50255-01	HULL STORAGE BIN 4 (EUHULLSTORAGE)	BAW	YES / (NO)			0.2 - 5

Comments:

DAILY DIFFERENTIAL PRESSURE READINGS
PREP

Date: 8-16-2021

Any units found to be outside of the designated operational limits need prompt reporting and corrective action.

DAY SHIFT READINGS

Supervisor: Josh Bs

Unit ID	Unit Name (Permit Emission Unit)	Operator Initials	Operating Today?	Time of Reading	Pressure Drop (in. W.C.)	
					Reading	Limit
PDT-20840-01	JET DRYER BAGHOUSE A (EUPREP)	JZC	(YES) / NO	0500	4.49	0.5 - 10
PDT-20940-01	JET DRYER BAGHOUSE B (EUPREP)	JZC	(YES) / NO	0500	3.27	0.5 - 10
PDT-21710-01	EXHAUST FILTER (EUPREP)	JZC	(YES) / NO	0500	3.84	0.5 - 10
PDT-21875-01	HULL GRINDING BAGHOUSE (EUHULLGRINDING)	JZC	(YES) / NO	0500	2.55	0.5 - 10
PDT-21690-01	MEAL GRINDING BAGHOUSE (EUMEALGRINDING)	JZC	(YES) / NO	0500	3.15	0.5 - 10
PDT-50225-01	HULL STORAGE BIN 1 (EUHULLSTORAGE)	JZC	YES / (NO)			0.2 - 5
PDT-50235-01	HULL STORAGE BIN 2 (EUHULLSTORAGE)	JZC	(YES) / NO	0500	0.44	0.2 - 5
PDT-50245-01	HULL STORAGE BIN 3 (EUHULLSTORAGE)	JZC	(YES) / NO	1422	1.17	0.2 - 5
PDT-50255-01	HULL STORAGE BIN 4 (EUHULLSTORAGE)	JZC	YES / (NO)			0.2 - 5

NIGHT SHIFT READINGS

Supervisor: Thomas Holcomb

Unit ID	Unit Name (Permit Emission Unit)	Operator Initials	Operating Today?	Time of Reading	Pressure Drop (in. W.C.)	
					Reading	Limit
PDT-20840-01	JET DRYER BAGHOUSE A (EUPREP)	JM	(YES) / NO	1700	4.76	0.5 - 10
PDT-20940-01	JET DRYER BAGHOUSE B (EUPREP)	JM	(YES) / NO	1700	4.84	0.5 - 10
PDT-21710-01	EXHAUST FILTER (EUPREP)	JM	(YES) / NO	1700	3.90	0.5 - 10
PDT-21875-01	HULL GRINDING BAGHOUSE (EUHULLGRINDING)	JM	(YES) / NO	1700	3.74	0.5 - 10
PDT-21690-01	MEAL GRINDING BAGHOUSE (EUMEALGRINDING)	JM	(YES) / NO	1700	2.94	0.5 - 10
PDT-50225-01	HULL STORAGE BIN 1 (EUHULLSTORAGE)	JM	YES / (NO)			0.2 - 5
PDT-50235-01	HULL STORAGE BIN 2 (EUHULLSTORAGE)	JM	YES / (NO)			0.2 - 5
PDT-50245-01	HULL STORAGE BIN 3 (EUHULLSTORAGE)	TH	(YES) / NO	1700	2.04	0.2 - 5
PDT-50255-01	HULL STORAGE BIN 4 (EUHULLSTORAGE)	JM	YES / (NO)			0.2 - 5

Comments:

DAILY DIFFERENTIAL PRESSURE READINGS
PREP

Date: 8-17-21

Any units found to be outside of the designated operational limits need prompt reporting and corrective action.

DAY SHIFT READINGS

Supervisor: Seth B

Unit ID	Unit Name (Permit Emission Unit)	Operator Initials	Operating Today?	Time of Reading	Pressure Drop (in. W.C.)	
					Reading	Limit
PDT-20840-01	JET DRYER BAGHOUSE A (EUPREP)	JZC	(YES) / NO	0600	4.68	0.5 - 10
PDT-20940-01	JET DRYER BAGHOUSE B (EUPREP)	JZC	(YES) / NO	0600	3.35	0.5 - 10
PDT-21710-01	EXHAUST FILTER (EUPREP)	JZC	(YES) / NO	0600	4.03	0.5 - 10
PDT-21875-01	HULL GRINDING BAGHOUSE (EUHULLGRINDING)	JZC	(YES) / NO	0600	7.55	0.5 - 10
PDT-21690-01	MEAL GRINDING BAGHOUSE (EUMEALGRINDING)	JZC	(YES) / NO	0600	3.04	0.5 - 10
PDT-50225-01	HULL STORAGE BIN 1 (EUHULLSTORAGE)	JZC	YES / (NO)			0.2 - 5
PDT-50235-01	HULL STORAGE BIN 2 (EUHULLSTORAGE)	JZC	(YES) / NO	1615	0.75	0.2 - 5
PDT-50245-01	HULL STORAGE BIN 3 (EUHULLSTORAGE)	JZC	(YES) / NO	0540	1.63	0.2 - 5
PDT-50255-01	HULL STORAGE BIN 4 (EUHULLSTORAGE)	JZC	YES / (NO)			0.2 - 5

NIGHT SHIFT READINGS

Supervisor: Thomas Hobbs

Unit ID	Unit Name (Permit Emission Unit)	Operator Initials	Operating Today?	Time of Reading	Pressure Drop (in. W.C.)	
					Reading	Limit
PDT-20840-01	JET DRYER BAGHOUSE A (EUPREP)	JM	(YES) / NO	1700	4.80	0.5 - 10
PDT-20940-01	JET DRYER BAGHOUSE B (EUPREP)	JM	(YES) / NO	1700	5.35	0.5 - 10
PDT-21710-01	EXHAUST FILTER (EUPREP)	JM	(YES) / NO	1700	4.06	0.5 - 10
PDT-21875-01	HULL GRINDING BAGHOUSE (EUHULLGRINDING)	JM	(YES) / NO	1700	6.29	0.5 - 10
PDT-21690-01	MEAL GRINDING BAGHOUSE (EUMEALGRINDING)	JM	(YES) / NO	1700	2.98	0.5 - 10
PDT-50225-01	HULL STORAGE BIN 1 (EUHULLSTORAGE)	JM	YES / (NO)			0.2 - 5
PDT-50235-01	HULL STORAGE BIN 2 (EUHULLSTORAGE)	TH	(YES) / NO	1715	0.78	0.2 - 5
PDT-50245-01	HULL STORAGE BIN 3 (EUHULLSTORAGE)	TH	(YES) / NO	2205	1.84	0.2 - 5
PDT-50255-01	HULL STORAGE BIN 4 (EUHULLSTORAGE)	JM	YES / (NO)			0.2 - 5

Comments:

DAILY DIFFERENTIAL PRESSURE READINGS
PREP

Date: 08118/2021

Any units found to be outside of the designated operational limits need prompt reporting and corrective action.

DAY SHIFT READINGS

Supervisor: [signature]

Unit ID	Unit Name (Permit Emission Unit)	Operator Initials	Operating Today?	Time of Reading	Pressure Drop (in. W.C.)	
					Reading	Limit
PDT-20840-01	JET DRYER BAGHOUSE A (EUPREP)	BMO	(YES) / NO	0557	4.75	0.5 - 10
PDT-20940-01	JET DRYER BAGHOUSE B (EUPREP)	BMO	(YES) / NO	0551	3.65	0.5 - 10
PDT-21710-01	EXHAUST FILTER (EUPREP)	BMO	(YES) / NO	0551	4.17	0.5 - 10
PDT-21875-01	HULL GRINDING BAGHOUSE (EUHULLGRINDING)	BMO	(YES) / NO	0551	2.13	0.5 - 10
PDT-21690-01	MEAL GRINDING BAGHOUSE (EUMEALGRINDING)	BMO	(YES) / NO	0551	3.13	0.5 - 10
PDT-50225-01	HULL STORAGE BIN 1 (EUHULLSTORAGE)	BMO	(YES) / NO	1317	0.40	0.2 - 5
PDT-50235-01	HULL STORAGE BIN 2 (EUHULLSTORAGE)	BMO	(YES) / NO	0904	0.72	0.2 - 5
PDT-50245-01	HULL STORAGE BIN 3 (EUHULLSTORAGE)	BMO	(YES) / NO	0550	1.49	0.2 - 5
PDT-50255-01	HULL STORAGE BIN 4 (EUHULLSTORAGE)	BMO	(YES) / NO	0729	0.48	0.2 - 5

NIGHT SHIFT READINGS

Supervisor: [signature]

Unit ID	Unit Name (Permit Emission Unit)	Operator Initials	Operating Today?	Time of Reading	Pressure Drop (in. W.C.)	
					Reading	Limit
PDT-20840-01	JET DRYER BAGHOUSE A (EUPREP)	BAW	(YES) / NO	1734	4.72	0.5 - 10
PDT-20940-01	JET DRYER BAGHOUSE B (EUPREP)	BAW	(YES) / NO	1734	4.93	0.5 - 10
PDT-21710-01	EXHAUST FILTER (EUPREP)	BAW	(YES) / NO	1734	4.16	0.5 - 10
PDT-21875-01	HULL GRINDING BAGHOUSE (EUHULLGRINDING)	BAW	(YES) / NO	1734	2.19	0.5 - 10
PDT-21690-01	MEAL GRINDING BAGHOUSE (EUMEALGRINDING)	BAW	(YES) / NO	1734	3.05	0.5 - 10
PDT-50225-01	HULL STORAGE BIN 1 (EUHULLSTORAGE)	BAW	YES / (NO)	BW 17	BW .64	0.2 - 5
PDT-50235-01	HULL STORAGE BIN 2 (EUHULLSTORAGE)	BAW	(YES) / NO	1734	0.64	0.2 - 5
PDT-50245-01	HULL STORAGE BIN 3 (EUHULLSTORAGE)	BAW	(YES) / NO	2213	1.13	0.2 - 5
PDT-50255-01	HULL STORAGE BIN 4 (EUHULLSTORAGE)	BAW	YES / (NO)			0.2 - 5

Comments:

DAILY DIFFERENTIAL PRESSURE READINGS
PREP

Date: 8-19-21

Any units found to be outside of the designated operational limits need prompt reporting and corrective action.

DAY SHIFT READINGS

Supervisor: Bryan McKeel

Unit ID	Unit Name (Permit Emission Unit)	Operator Initials	Operating Today?	Time of Reading	Pressure Drop (in. W.C.)	
					Reading	Limit
PDT-20840-01	JET DRYER BAGHOUSE A (EUPREP)	VD	(YES) / NO	0540	4.66	0.5 - 10
PDT-20940-01	JET DRYER BAGHOUSE B (EUPREP)	VD	(YES) / NO	0540	3.71	0.5 - 10
PDT-21710-01	EXHAUST FILTER (EUPREP)	VD	(YES) / NO	0540	4.15	0.5 - 10
PDT-21875-01	HULL GRINDING BAGHOUSE (EUHULLGRINDING)	VD	(YES) / NO	0540	2.20	0.5 - 10
PDT-21690-01	MEAL GRINDING BAGHOUSE (EUMEALGRINDING)	VD	(YES) / NO	0541	3.19	0.5 - 10
PDT-50225-01	HULL STORAGE BIN 1 (EUHULLSTORAGE)	BNW	YES / (NO)			0.2 - 5
PDT-50235-01	HULL STORAGE BIN 2 (EUHULLSTORAGE)	VD	(YES) / NO	0545	0.54	0.2 - 5
PDT-50245-01	HULL STORAGE BIN 3 (EUHULLSTORAGE)	VD	(YES) / NO	0552	0.42	0.2 - 5
PDT-50255-01	HULL STORAGE BIN 4 (EUHULLSTORAGE)	BNW	YES / (NO)			0.2 - 5

NIGHT SHIFT READINGS

Supervisor: [illegible]

Unit ID	Unit Name (Permit Emission Unit)	Operator Initials	Operating Today?	Time of Reading	Pressure Drop (in. W.C.)	
					Reading	Limit
PDT-20840-01	JET DRYER BAGHOUSE A (EUPREP)	JM	(YES) / NO	1700	4.62	0.5 - 10
PDT-20940-01	JET DRYER BAGHOUSE B (EUPREP)	JM	(YES) / NO	1700	5.04	0.5 - 10
PDT-21710-01	EXHAUST FILTER (EUPREP)	JM	(YES) / NO	1700	4.13	0.5 - 10
PDT-21875-01	HULL GRINDING BAGHOUSE (EUHULLGRINDING)	JM	(YES) / NO	1700	2.27	0.5 - 10
PDT-21690-01	MEAL GRINDING BAGHOUSE (EUMEALGRINDING)	JM	(YES) / NO	1700	2.94	0.5 - 10
PDT-50225-01	HULL STORAGE BIN 1 (EUHULLSTORAGE)	JM	YES / (NO)			0.2 - 5
PDT-50235-01	HULL STORAGE BIN 2 (EUHULLSTORAGE)	JM	(YES) / NO	1700	0.70	0.2 - 5
PDT-50245-01	HULL STORAGE BIN 3 (EUHULLSTORAGE)	JM	YES / (NO)			0.2 - 5
PDT-50255-01	HULL STORAGE BIN 4 (EUHULLSTORAGE)	JM	YES / (NO)			0.2 - 5

Comments:

DAILY DIFFERENTIAL PRESSURE READINGS
PREP

Date: 8-20-2021

Any units found to be outside of the designated operational limits need prompt reporting and corrective action.

DAY SHIFT READINGS

Supervisor: [signature]

Unit ID	Unit Name (Permit Emission Unit)	Operator Initials	Operating Today?	Time of Reading	Pressure Drop (in. W.C.)	
					Reading	Limit
PDT-20840-01	JET DRYER BAGHOUSE A (EUPREP)	JCC	(YES) / NO	0815	4.81	0.5 - 10
PDT-20940-01	JET DRYER BAGHOUSE B (EUPREP)	JCC	(YES) / NO	0815	3.60	0.5 - 10
PDT-21710-01	EXHAUST FILTER (EUPREP)	JCC	(YES) / NO	0815	4.25	0.5 - 10
PDT-21875-01	HULL GRINDING BAGHOUSE (EUHULLGRINDING)	JCC	(YES) / NO	0815	4.05	0.5 - 10
PDT-21690-01	MEAL GRINDING BAGHOUSE (EUMEALGRINDING)	JCC	(YES) / NO	0815	3.21	0.5 - 10
PDT-50225-01	HULL STORAGE BIN 1 (EUHULLSTORAGE)	JCC	YES / (NO)			0.2 - 5
PDT-50235-01	HULL STORAGE BIN 2 (EUHULLSTORAGE)	JCC	(YES) / NO	0723	0.64	0.2 - 5
PDT-50245-01	HULL STORAGE BIN 3 (EUHULLSTORAGE)	JCC	(YES) / NO	0600	0.35	0.2 - 5
PDT-50255-01	HULL STORAGE BIN 4 (EUHULLSTORAGE)	JCC	YES / (NO)			0.2 - 5

NIGHT SHIFT READINGS

Supervisor: [signature]

Unit ID	Unit Name (Permit Emission Unit)	Operator Initials	Operating Today?	Time of Reading	Pressure Drop (in. W.C.)	
					Reading	Limit
PDT-20840-01	JET DRYER BAGHOUSE A (EUPREP)	MP	(YES) / NO	1710	4.89	0.5 - 10
PDT-20940-01	JET DRYER BAGHOUSE B (EUPREP)	MP	(YES) / NO	1710	5.57	0.5 - 10
PDT-21710-01	EXHAUST FILTER (EUPREP)	MP	(YES) / NO	1710	4.43	0.5 - 10
PDT-21875-01	HULL GRINDING BAGHOUSE (EUHULLGRINDING)	MP	(YES) / NO	1710	5.74	0.5 - 10
PDT-21690-01	MEAL GRINDING BAGHOUSE (EUMEALGRINDING)	MP	(YES) / NO	1710	2.92	0.5 - 10
PDT-50225-01	HULL STORAGE BIN 1 (EUHULLSTORAGE)	MP	YES / (NO)			0.2 - 5
PDT-50235-01	HULL STORAGE BIN 2 (EUHULLSTORAGE)	MP	(YES) / NO	1711	0.70	0.2 - 5
PDT-50245-01	HULL STORAGE BIN 3 (EUHULLSTORAGE)	MP	(YES) / NO	0015	1.23	0.2 - 5
PDT-50255-01	HULL STORAGE BIN 4 (EUHULLSTORAGE)	MP	YES / (NO)			0.2 - 5

Comments:

DAILY DIFFERENTIAL PRESSURE READINGS
PREP

Date: 8-21-2021

Any units found to be outside of the designated operational limits need prompt reporting and corrective action.

DAY SHIFT READINGS

Supervisor: Seth K

Unit ID	Unit Name (Permit Emission Unit)	Operator Initials	Operating Today?	Time of Reading	Pressure Drop (in. W.C.)	
					Reading	Limit
PDT-20840-01	JET DRYER BAGHOUSE A (EUPREP)	JZC	(YES) / NO	0500	4.79	0.5 - 10
PDT-20940-01	JET DRYER BAGHOUSE B (EUPREP)	JZC	(YES) / NO	0500	4.06	0.5 - 10
PDT-21710-01	EXHAUST FILTER (EUPREP)	JZC	(YES) / NO	0500	4.46	0.5 - 10
PDT-21875-01	HULL GRINDING BAGHOUSE (EUHULLGRINDING)	JZC	(YES) / NO	0500	4.99	0.5 - 10
PDT-21690-01	MEAL GRINDING BAGHOUSE (EUMEALGRINDING)	JZC	(YES) / NO	0500	3.25	0.5 - 10
PDT-50225-01	HULL STORAGE BIN 1 (EUHULLSTORAGE)	JZC	YES / (NO)			0.2 - 5
PDT-50235-01	HULL STORAGE BIN 2 (EUHULLSTORAGE)	JZC	YES / (NO)			0.2 - 5
PDT-50245-01	HULL STORAGE BIN 3 (EUHULLSTORAGE)	JZC	(YES) / NO	0500	1.50	0.2 - 5
PDT-50255-01	HULL STORAGE BIN 4 (EUHULLSTORAGE)	JZC	YES / (NO)			0.2 - 5

NIGHT SHIFT READINGS

Supervisor: Thomas Holcomb

Unit ID	Unit Name (Permit Emission Unit)	Operator Initials	Operating Today?	Time of Reading	Pressure Drop (in. W.C.)	
					Reading	Limit
PDT-20840-01	JET DRYER BAGHOUSE A (EUPREP)	JS	(YES) / NO	1700	4.56	0.5 - 10
PDT-20940-01	JET DRYER BAGHOUSE B (EUPREP)	JS	(YES) / NO	1700	5.97	0.5 - 10
PDT-21710-01	EXHAUST FILTER (EUPREP)	JS	(YES) / NO	1700	4.37	0.5 - 10
PDT-21875-01	HULL GRINDING BAGHOUSE (EUHULLGRINDING)	JS	(YES) / NO	1700	6.43	0.5 - 10
PDT-21690-01	MEAL GRINDING BAGHOUSE (EUMEALGRINDING)	JS	(YES) / NO	1700	3.04	0.5 - 10
PDT-50225-01	HULL STORAGE BIN 1 (EUHULLSTORAGE)		YES / (NO)			0.2 - 5
PDT-50235-01	HULL STORAGE BIN 2 (EUHULLSTORAGE)	TH	(YES) / NO	1724	1.77	0.2 - 5
PDT-50245-01	HULL STORAGE BIN 3 (EUHULLSTORAGE)	TH	(YES) / NO	1902	0.76	0.2 - 5
PDT-50255-01	HULL STORAGE BIN 4 (EUHULLSTORAGE)		YES / (NO)			0.2 - 5

15 - Stamp

Comments:

HB 2 and HB 3 numbers are swapped. I accidentally filled in the wRong line. HB 3 was Running @ 1724 and HB 2 was Running @ 1902 - TH

DAILY DIFFERENTIAL PRESSURE READINGS
PREP

Date: 8.22.21

Any units found to be outside of the designated operational limits need prompt reporting and corrective action.

DAY SHIFT READINGS

Supervisor: [signature]

Unit ID	Unit Name (Permit Emission Unit)	Operator Initials	Operating Today?	Time of Reading	Pressure Drop (in. W.C.)	
					Reading	Limit
PDT-20840-01	JET DRYER BAGHOUSE A (EUPREP)	JZC	(YES) / NO	0500	4.69	0.5 - 10
PDT-20940-01	JET DRYER BAGHOUSE B (EUPREP)	JZC	(YES) / NO	0500	3.66	0.5 - 10
PDT-21710-01	EXHAUST FILTER (EUPREP)	JZC	(YES) / NO	0500	4.48	0.5 - 10
PDT-21875-01	HULL GRINDING BAGHOUSE (EUHULLGRINDING)	JZC	(YES) / NO	0500	5.70	0.5 - 10
PDT-21690-01	MEAL GRINDING BAGHOUSE (EUMEALGRINDING)	JZC	(YES) / NO	0500	3.25	0.5 - 10
PDT-50225-01	HULL STORAGE BIN 1 (EUHULLSTORAGE)	JZC	YES / (NO)			0.2 - 5
PDT-50235-01	HULL STORAGE BIN 2 (EUHULLSTORAGE)	JZC	(YES) / NO	0500	0.67	0.2 - 5
PDT-50245-01	HULL STORAGE BIN 3 (EUHULLSTORAGE)	JZC	(YES) / NO	1130	1.75	0.2 - 5
PDT-50255-01	HULL STORAGE BIN 4 (EUHULLSTORAGE)	JZC	YES / (NO)			0.2 - 5

NIGHT SHIFT READINGS

Supervisor: Thomas Holcomb

Unit ID	Unit Name (Permit Emission Unit)	Operator Initials	Operating Today?	Time of Reading	Pressure Drop (in. W.C.)	
					Reading	Limit
PDT-20840-01	JET DRYER BAGHOUSE A (EUPREP)	JM	(YES) / NO	1700	4.57	0.5 - 10
PDT-20940-01	JET DRYER BAGHOUSE B (EUPREP)	JM	(YES) / NO	1700	4.71	0.5 - 10
PDT-21710-01	EXHAUST FILTER (EUPREP)	JM	(YES) / NO	1700	4.51	0.5 - 10
PDT-21875-01	HULL GRINDING BAGHOUSE (EUHULLGRINDING)	JM	(YES) / NO	1700	5.35	0.5 - 10
PDT-21690-01	MEAL GRINDING BAGHOUSE (EUMEALGRINDING)	JM	(YES) / NO	1700	3.23	0.5 - 10
PDT-50225-01	HULL STORAGE BIN 1 (EUHULLSTORAGE)	JM	YES / (NO)			0.2 - 5
PDT-50235-01	HULL STORAGE BIN 2 (EUHULLSTORAGE)	JM	YES / (NO)			0.2 - 5
PDT-50245-01	HULL STORAGE BIN 3 (EUHULLSTORAGE)	JM	(YES) / NO	1700	1.62	0.2 - 5
PDT-50255-01	HULL STORAGE BIN 4 (EUHULLSTORAGE)	JM	YES / (NO)			0.2 - 5

Comments:

DAILY DIFFERENTIAL PRESSURE READINGS
PREP

Date: 08/23/2021

Any units found to be outside of the designated operational limits need prompt reporting and corrective action.

DAY SHIFT READINGS

Supervisor: Joe Hoar

Unit ID	Unit Name (Permit Emission Unit)	Operator Initials	Operating Today?	Time of Reading	Pressure Drop (in. W.C.)	
					Reading	Limit
PDT-20840-01	JET DRYER BAGHOUSE A (EUPREP)	BMD	(YES) / NO	0535	4.81	0.5 - 10
PDT-20940-01	JET DRYER BAGHOUSE B (EUPREP)	BMD	(YES) / NO	0535	3.24	0.5 - 10
PDT-21710-01	EXHAUST FILTER (EUPREP)	BMD	(YES) / NO	0535	4.55	0.5 - 10
PDT-21875-01	HULL GRINDING BAGHOUSE (EUHULLGRINDING)	BMD	(YES) / NO	0535	4.89	0.5 - 10
PDT-21690-01	MEAL GRINDING BAGHOUSE (EUMEALGRINDING)	BMD	(YES) / NO	0535	3.27	0.5 - 10
PDT-50225-01	HULL STORAGE BIN 1 (EUHULLSTORAGE)	BMD	YES / (NO)			0.2 - 5
PDT-50235-01	HULL STORAGE BIN 2 (EUHULLSTORAGE)	BMD	(YES) / NO	1444	0.72	0.2 - 5
PDT-50245-01	HULL STORAGE BIN 3 (EUHULLSTORAGE)	BMD	(YES) / NO	0534	1.82	0.2 - 5
PDT-50255-01	HULL STORAGE BIN 4 (EUHULLSTORAGE)	BMD	YES / (NO)			0.2 - 5

NIGHT SHIFT READINGS

Supervisor: Joseph Hoar

Unit ID	Unit Name (Permit Emission Unit)	Operator Initials	Operating Today?	Time of Reading	Pressure Drop (in. W.C.)	
					Reading	Limit
PDT-20840-01	JET DRYER BAGHOUSE A (EUPREP)	JF	(YES) / NO	1710	4.71	0.5 - 10
PDT-20940-01	JET DRYER BAGHOUSE B (EUPREP)	JF	(YES) / NO	1711	4.76	0.5 - 10
PDT-21710-01	EXHAUST FILTER (EUPREP)	JF	(YES) / NO	1712	5.13	0.5 - 10
PDT-21875-01	HULL GRINDING BAGHOUSE (EUHULLGRINDING)	JF	(YES) / NO	1712	2.08	0.5 - 10
PDT-21690-01	MEAL GRINDING BAGHOUSE (EUMEALGRINDING)	JF	(YES) / NO	1713	3.05	0.5 - 10
PDT-50225-01	HULL STORAGE BIN 1 (EUHULLSTORAGE)	JF	YES / (NO)			0.2 - 5
PDT-50235-01	HULL STORAGE BIN 2 (EUHULLSTORAGE)	JF	(YES) / NO	1713	0.66	0.2 - 5
PDT-50245-01	HULL STORAGE BIN 3 (EUHULLSTORAGE)	JF	YES / (NO)			0.2 - 5
PDT-50255-01	HULL STORAGE BIN 4 (EUHULLSTORAGE)	JF	YES / (NO)			0.2 - 5

Comments:

DAILY DIFFERENTIAL PRESSURE READINGS
PREP

Date: 08/24/2021

Any units found to be outside of the designated operational limits need prompt reporting and corrective action.

DAY SHIFT READINGS

Supervisor: [signature]

Unit ID	Unit Name (Permit Emission Unit)	Operator Initials	Operating Today?	Time of Reading	Pressure Drop (in. W.C.)	
					Reading	Limit
PDT-20840-01	JET DRYER BAGHOUSE A (EUPREP)	BMO	(YES) / NO	0519	4.76	0.5 - 10
PDT-20940-01	JET DRYER BAGHOUSE B (EUPREP)	BMO	(YES) / NO	0519	3.52	0.5 - 10
PDT-21710-01	EXHAUST FILTER (EUPREP)	BMO	(YES) / NO	0519	5.20	0.5 - 10
PDT-21875-01	HULL GRINDING BAGHOUSE (EUHULLGRINDING)	BMO	(YES) / NO	0519	2.14	0.5 - 10
PDT-21690-01	MEAL GRINDING BAGHOUSE (EUMEALGRINDING)	BMO	(YES) / NO	0519	3.32	0.5 - 10
PDT-50225-01	HULL STORAGE BIN 1 (EUHULLSTORAGE)	BMO	YES / (NO)			0.2 - 5
PDT-50235-01	HULL STORAGE BIN 2 (EUHULLSTORAGE)	BMO	(YES) / NO	0519	0.52	0.2 - 5
PDT-50245-01	HULL STORAGE BIN 3 (EUHULLSTORAGE)	BMO	(YES) / NO	0642	1.36	0.2 - 5
PDT-50255-01	HULL STORAGE BIN 4 (EUHULLSTORAGE)	BMO	YES / (NO)			0.2 - 5

NIGHT SHIFT READINGS

Supervisor: [signature]

Unit ID	Unit Name (Permit Emission Unit)	Operator Initials	Operating Today?	Time of Reading	Pressure Drop (in. W.C.)	
					Reading	Limit
PDT-20840-01	JET DRYER BAGHOUSE A (EUPREP)	BAW	(YES) / NO	1711	4.79	0.5 - 10
PDT-20940-01	JET DRYER BAGHOUSE B (EUPREP)	BAW	(YES) / NO	1711	5.33	0.5 - 10
PDT-21710-01	EXHAUST FILTER (EUPREP)	BAW	(YES) / NO	1711	5.24	0.5 - 10
PDT-21875-01	HULL GRINDING BAGHOUSE (EUHULLGRINDING)	BAW	(YES) / NO	1711	2.19	0.5 - 10
PDT-21690-01	MEAL GRINDING BAGHOUSE (EUMEALGRINDING)	BAW	(YES) / NO	1711	3.16	0.5 - 10
PDT-50225-01	HULL STORAGE BIN 1 (EUHULLSTORAGE)	BAW	YES / (NO)	94		0.2 - 5
PDT-50235-01	HULL STORAGE BIN 2 (EUHULLSTORAGE)	BAW	(YES) / NO	1711	0.68	0.2 - 5
PDT-50245-01	HULL STORAGE BIN 3 (EUHULLSTORAGE)	BAW	YES / (NO)			0.2 - 5
PDT-50255-01	HULL STORAGE BIN 4 (EUHULLSTORAGE)	BAW	YES / (NO)			0.2 - 5

Comments:

DAILY DIFFERENTIAL PRESSURE READINGS
PREP

Date: 8-25-2021

Any units found to be outside of the designated operational limits need prompt reporting and corrective action.

DAY SHIFT READINGS

Supervisor: [signature]

Unit ID	Unit Name (Permit Emission Unit)	Operator Initials	Operating Today?	Time of Reading	Pressure Drop (in. W.C.)	
					Reading	Limit
PDT-20840-01	JET DRYER BAGHOUSE A (EUPREP)	JZC	(YES) / NO	0545	4.76	0.5 - 10
PDT-20940-01	JET DRYER BAGHOUSE B (EUPREP)	JZC	(YES) / NO	0545	5.80	0.5 - 10
PDT-21710-01	EXHAUST FILTER (EUPREP)	JZC	(YES) / NO	0545	5.27	0.5 - 10
PDT-21875-01	HULL GRINDING BAGHOUSE (EUHULLGRINDING)	JZC	(YES) / NO	0545	2.17	0.5 - 10
PDT-21690-01	MEAL GRINDING BAGHOUSE (EUMEALGRINDING)	JZC	(YES) / NO	0545	3.37	0.5 - 10
PDT-50225-01	HULL STORAGE BIN 1 (EUHULLSTORAGE)	JZC	YES / (NO)			0.2 - 5
PDT-50235-01	HULL STORAGE BIN 2 (EUHULLSTORAGE)	JZC	(YES) / NO	0526	0.63	0.2 - 5
PDT-50245-01	HULL STORAGE BIN 3 (EUHULLSTORAGE)	JZC	(YES) / NO	0930	1.72	0.2 - 5
PDT-50255-01	HULL STORAGE BIN 4 (EUHULLSTORAGE)	JZC	(YES) / NO	0730	0.35	0.2 - 5

NIGHT SHIFT READINGS

Supervisor: [signature]

Unit ID	Unit Name (Permit Emission Unit)	Operator Initials	Operating Today?	Time of Reading	Pressure Drop (in. W.C.)	
					Reading	Limit
PDT-20840-01	JET DRYER BAGHOUSE A (EUPREP)	JS	(YES) / NO	1700	4.61	0.5 - 10
PDT-20940-01	JET DRYER BAGHOUSE B (EUPREP)	JS	(YES) / NO	1700	3.78	0.5 - 10
PDT-21710-01	EXHAUST FILTER (EUPREP)	JS	(YES) / NO	1700	5.14	0.5 - 10
PDT-21875-01	HULL GRINDING BAGHOUSE (EUHULLGRINDING)	JS	(YES) / NO	1700	2.48	0.5 - 10
PDT-21690-01	MEAL GRINDING BAGHOUSE (EUMEALGRINDING)	JS	(YES) / NO	1700	3.09	0.5 - 10
PDT-50225-01	HULL STORAGE BIN 1 (EUHULLSTORAGE)	JS	YES / (NO)			0.2 - 5
PDT-50235-01	HULL STORAGE BIN 2 (EUHULLSTORAGE)	JS	YES / (NO)			0.2 - 5
PDT-50245-01	HULL STORAGE BIN 3 (EUHULLSTORAGE)	JS	(YES) / NO	1700	2.07	0.2 - 5
PDT-50255-01	HULL STORAGE BIN 4 (EUHULLSTORAGE)	JS	YES / (NO)			0.2 - 5

Comments:

DAILY DIFFERENTIAL PRESSURE READINGS
PREP

Date: 8-26-21

Any units found to be outside of the designated operational limits need prompt reporting and corrective action.

DAY SHIFT READINGS

Supervisor: Seth H

Unit ID	Unit Name (Permit Emission Unit)	Operator Initials	Operating Today?	Time of Reading	Pressure Drop (in. W.C.)	
					Reading	Limit
PDT-20840-01	JET DRYER BAGHOUSE A (EUPREP)	JZC	(YES) / NO	0530	4.66	0.5 - 10
PDT-20940-01	JET DRYER BAGHOUSE B (EUPREP)	JZC	(YES) / NO	0530	3.82	0.5 - 10
PDT-21710-01	EXHAUST FILTER (EUPREP)	JZC	(YES) / NO	0530	5.26	0.5 - 10
PDT-21875-01	HULL GRINDING BAGHOUSE (EUHULLGRINDING)	JZC	(YES) / NO	0530	2.73	0.5 - 10
PDT-21690-01	MEAL GRINDING BAGHOUSE (EUMEALGRINDING)	JZC	(YES) / NO	0530	3.32	0.5 - 10
PDT-50225-01	HULL STORAGE BIN 1 (EUHULLSTORAGE)	JZC	YES / (NO)			0.2 - 5
PDT-50235-01	HULL STORAGE BIN 2 (EUHULLSTORAGE)	JZC	YES / (NO)			0.2 - 5
PDT-50245-01	HULL STORAGE BIN 3 (EUHULLSTORAGE)	JZC	(YES) / NO	0523	1.81	0.2 - 5
PDT-50255-01	HULL STORAGE BIN 4 (EUHULLSTORAGE)	JZC	YES / (NO)			0.2 - 5

NIGHT SHIFT READINGS

Supervisor: Thomas Holmes

Unit ID	Unit Name (Permit Emission Unit)	Operator Initials	Operating Today?	Time of Reading	Pressure Drop (in. W.C.)	
					Reading	Limit
PDT-20840-01	JET DRYER BAGHOUSE A (EUPREP)	JM	(YES) / NO	1720	4.93	0.5 - 10
PDT-20940-01	JET DRYER BAGHOUSE B (EUPREP)	JM	(YES) / NO	1720	3.82	0.5 - 10
PDT-21710-01	EXHAUST FILTER (EUPREP)	JM	(YES) / NO	1720	5.25	0.5 - 10
PDT-21875-01	HULL GRINDING BAGHOUSE (EUHULLGRINDING)	JM	(YES) / NO	1720	6.91	0.5 - 10
PDT-21690-01	MEAL GRINDING BAGHOUSE (EUMEALGRINDING)	JM	(YES) / NO	1720	3.14	0.5 - 10
PDT-50225-01	HULL STORAGE BIN 1 (EUHULLSTORAGE)	JM	YES / (NO)			0.2 - 5
PDT-50235-01	HULL STORAGE BIN 2 (EUHULLSTORAGE)	JM	(YES) / NO	1720	0.86	0.2 - 5
PDT-50245-01	HULL STORAGE BIN 3 (EUHULLSTORAGE)	JM	(YES) / NO	1345	1.86	0.2 - 5
PDT-50255-01	HULL STORAGE BIN 4 (EUHULLSTORAGE)	JM	YES / (NO)			0.2 - 5

Comments:

DAILY DIFFERENTIAL PRESSURE READINGS
PREP

Date: 08/27/2021

Any units found to be outside of the designated operational limits need prompt reporting and corrective action.

DAY SHIFT READINGS

Supervisor: [signature]

Unit ID	Unit Name (Permit Emission Unit)	Operator Initials	Operating Today?	Time of Reading	Pressure Drop (in. W.C.)	
					Reading	Limit
PDT-20840-01	JET DRYER BAGHOUSE A (EUPREP)	BMO	(YES) / NO	0525	4.76	0.5 - 10
PDT-20940-01	JET DRYER BAGHOUSE B (EUPREP)	BMO	(YES) / NO	0525	3.73	0.5 - 10
PDT-21710-01	EXHAUST FILTER (EUPREP)	BMO	(YES) / NO	0525	5.25	0.5 - 10
PDT-21875-01	HULL GRINDING BAGHOUSE (EUHULLGRINDING)	BMO	(YES) / NO	0525	2.47	0.5 - 10
PDT-21690-01	MEAL GRINDING BAGHOUSE (EUMEALGRINDING)	BMO	(YES) / NO	0525	3.26	0.5 - 10
PDT-50225-01	HULL STORAGE BIN 1 (EUHULLSTORAGE)	BMO	YES / (NO)			0.2 - 5
PDT-50235-01	HULL STORAGE BIN 2 (EUHULLSTORAGE)	BMO	(YES) / NO	1345	0.68	0.2 - 5
PDT-50245-01	HULL STORAGE BIN 3 (EUHULLSTORAGE)	BMO	(YES) / NO	0525	1.10	0.2 - 5
PDT-50255-01	HULL STORAGE BIN 4 (EUHULLSTORAGE)	BMO	YES / (NO)			0.2 - 5

NIGHT SHIFT READINGS

Supervisor: [signature]

Unit ID	Unit Name (Permit Emission Unit)	Operator Initials	Operating Today?	Time of Reading	Pressure Drop (in. W.C.)	
					Reading	Limit
PDT-20840-01	JET DRYER BAGHOUSE A (EUPREP)	JLF	(YES) / NO	1711	4.88	0.5 - 10
PDT-20940-01	JET DRYER BAGHOUSE B (EUPREP)	JLF	(YES) / NO	1712	6.25	0.5 - 10
PDT-21710-01	EXHAUST FILTER (EUPREP)	JLF	(YES) / NO	1712	5.22	0.5 - 10
PDT-21875-01	HULL GRINDING BAGHOUSE (EUHULLGRINDING)	JLF	(YES) / NO	1712	2.18	0.5 - 10
PDT-21690-01	MEAL GRINDING BAGHOUSE (EUMEALGRINDING)	JLF	(YES) / NO	1713	3.27	0.5 - 10
PDT-50225-01	HULL STORAGE BIN 1 (EUHULLSTORAGE)	JLF	YES / (NO)			0.2 - 5
PDT-50235-01	HULL STORAGE BIN 2 (EUHULLSTORAGE)	JLF	(YES) / NO	1714	0.76	0.2 - 5
PDT-50245-01	HULL STORAGE BIN 3 (EUHULLSTORAGE)	JLF	YES / (NO)			0.2 - 5
PDT-50255-01	HULL STORAGE BIN 4 (EUHULLSTORAGE)	JLF	YES / (NO)			0.2 - 5

Comments:

DAILY DIFFERENTIAL PRESSURE READINGS
PREP

Date: 08/28/2021

Any units found to be outside of the designated operational limits need prompt reporting and corrective action.

DAY SHIFT READINGS

Supervisor: J Mur

Unit ID	Unit Name (Permit Emission Unit)	Operator Initials	Operating Today?	Time of Reading	Pressure Drop (in. W.C.)	
					Reading	Limit
PDT-20840-01	JET DRYER BAGHOUSE A (EUPREP)	BMO	(YES) / NO	0532	4.88	0.5 - 10
PDT-20940-01	JET DRYER BAGHOUSE B (EUPREP)	BMO	(YES) / NO	0532	4.74	0.5 - 10
PDT-21710-01	EXHAUST FILTER (EUPREP)	BMO	(YES) / NO	0532	5.23	0.5 - 10
PDT-21875-01	HULL GRINDING BAGHOUSE (EUHULLGRINDING)	BMO	(YES) / NO	0532	2.28	0.5 - 10
PDT-21690-01	MEAL GRINDING BAGHOUSE (EUMEALGRINDING)	BMO	(YES) / NO	0532 BMO	3.37	0.5 - 10
PDT-50225-01	HULL STORAGE BIN 1 (EUHULLSTORAGE)	BMO	YES / (NO)			0.2 - 5
PDT-50235-01	HULL STORAGE BIN 2 (EUHULLSTORAGE)	BMO	(YES) / NO	0529	1.14	0.2 - 5
PDT-50245-01	HULL STORAGE BIN 3 (EUHULLSTORAGE)	BMO	YES / (NO)			0.2 - 5
PDT-50255-01	HULL STORAGE BIN 4 (EUHULLSTORAGE)	BMO	YES / (NO)			0.2 - 5

NIGHT SHIFT READINGS

Supervisor: J Mur

Unit ID	Unit Name (Permit Emission Unit)	Operator Initials	Operating Today?	Time of Reading	Pressure Drop (in. W.C.)	
					Reading	Limit
PDT-20840-01	JET DRYER BAGHOUSE A (EUPREP)	JLF	(YES) / NO	1827	4.73	0.5 - 10
PDT-20940-01	JET DRYER BAGHOUSE B (EUPREP)	JLF	(YES) / NO	1827	5.03	0.5 - 10
PDT-21710-01	EXHAUST FILTER (EUPREP)	JLF	(YES) / NO	1828	5.20	0.5 - 10
PDT-21875-01	HULL GRINDING BAGHOUSE (EUHULLGRINDING)	JLF	(YES) NO	1828	2.30	0.5 - 10
PDT-21690-01	MEAL GRINDING BAGHOUSE (EUMEALGRINDING)	JLF	(YES) / NO	1828	3.11	0.5 - 10
PDT-50225-01	HULL STORAGE BIN 1 (EUHULLSTORAGE)	"	YES / (NO)			0.2 - 5
PDT-50235-01	HULL STORAGE BIN 2 (EUHULLSTORAGE)	JLF	(YES) / NO	1828	0.57	0.2 - 5
PDT-50245-01	HULL STORAGE BIN 3 (EUHULLSTORAGE)	"	YES / (NO)			0.2 - 5
PDT-50255-01	HULL STORAGE BIN 4 (EUHULLSTORAGE)	"	YES / (NO)			0.2 - 5

Comments:

DAILY DIFFERENTIAL PRESSURE READINGS
PREP

Date: 8-29-21

Any units found to be outside of the designated operational limits need prompt reporting and corrective action.

DAY SHIFT READINGS

Supervisor: Bryan Mabry

Unit ID	Unit Name (Permit Emission Unit)	Operator Initials	Operating Today?	Time of Reading	Pressure Drop (in. W.C.)	
					Reading	Limit
PDT-20840-01	JET DRYER BAGHOUSE A (EUPREP)	VD	(YES) / NO	0601	4.68	0.5 - 10
PDT-20940-01	JET DRYER BAGHOUSE B (EUPREP)	VD	(YES) / NO	0601	5.56	0.5 - 10
PDT-21710-01	EXHAUST FILTER (EUPREP)	VD	(YES) / NO	0600	5.24	0.5 - 10
PDT-21875-01	HULL GRINDING BAGHOUSE (EUHULLGRINDING)	VD	(YES) / NO	0559	2.84	0.5 - 10
PDT-21690-01	MEAL GRINDING BAGHOUSE (EUMEALGRINDING)	VD	(YES) / NO	0558	3.38	0.5 - 10
PDT-50225-01	HULL STORAGE BIN 1 (EUHULLSTORAGE)	VD	YES / (NO)	0		0.2 - 5
PDT-50235-01	HULL STORAGE BIN 2 (EUHULLSTORAGE)	VD	(YES) / NO	0517	0.64	0.2 - 5
PDT-50245-01	HULL STORAGE BIN 3 (EUHULLSTORAGE)	VD	(YES) / NO	0555	0.74	0.2 - 5
PDT-50255-01	HULL STORAGE BIN 4 (EUHULLSTORAGE)	VD	YES (NO)			0.2 - 5

NIGHT SHIFT READINGS

Supervisor: [signature]

Unit ID	Unit Name (Permit Emission Unit)	Operator Initials	Operating Today?	Time of Reading	Pressure Drop (in. W.C.)	
					Reading	Limit
PDT-20840-01	JET DRYER BAGHOUSE A (EUPREP)	JLF	(YES) / NO	1900	4.90	0.5 - 10
PDT-20940-01	JET DRYER BAGHOUSE B (EUPREP)	JLF	(YES) / NO	1900	3.49	0.5 - 10
PDT-21710-01	EXHAUST FILTER (EUPREP)	JLF	(YES) / NO	1901	5.15	0.5 - 10
PDT-21875-01	HULL GRINDING BAGHOUSE (EUHULLGRINDING)	JLF	(YES) / NO	1901	2.43	0.5 - 10
PDT-21690-01	MEAL GRINDING BAGHOUSE (EUMEALGRINDING)	JLF	(YES) / NO	1902	3.32	0.5 - 10
PDT-50225-01	HULL STORAGE BIN 1 (EUHULLSTORAGE)	JLF	YES / (NO)			0.2 - 5
PDT-50235-01	HULL STORAGE BIN 2 (EUHULLSTORAGE)	JLF	YES / (NO)			0.2 - 5
PDT-50245-01	HULL STORAGE BIN 3 (EUHULLSTORAGE)	JLF	(YES) / NO	1903	1.52	0.2 - 5
PDT-50255-01	HULL STORAGE BIN 4 (EUHULLSTORAGE)	JLF	YES / (NO)			0.2 - 5

Comments:

DAILY DIFFERENTIAL PRESSURE READINGS
PREP

Date: 8.30.21

Any units found to be outside of the designated operational limits need prompt reporting and corrective action.

DAY SHIFT READINGS

Supervisor: Seth Be

Unit ID	Unit Name (Permit Emission Unit)	Operator Initials	Operating Today?	Time of Reading	Pressure Drop (in. W.C.)	
					Reading	Limit
PDT-20840-01	JET DRYER BAGHOUSE A (EUPREP)	JJ	(YES) / NO	0534	4.88	0.5 - 10
PDT-20940-01	JET DRYER BAGHOUSE B (EUPREP)	JJ	(YES) / NO	0534	3.33	0.5 - 10
PDT-21710-01	EXHAUST FILTER (EUPREP)	JJ	(YES) / NO	0534	5.15	0.5 - 10
PDT-21875-01	HULL GRINDING BAGHOUSE (EUHULLGRINDING)	JJ	(YES) / NO	0534	2.38	0.5 - 10
PDT-21690-01	MEAL GRINDING BAGHOUSE (EUMEALGRINDING)	JJ	(YES) / NO	0534	3.31	0.5 - 10
PDT-50225-01	HULL STORAGE BIN 1 (EUHULLSTORAGE)	JJ	YES / (NO)			0.2 - 5
PDT-50235-01	HULL STORAGE BIN 2 (EUHULLSTORAGE)	JJ	YES / (NO)			0.2 - 5
PDT-50245-01	HULL STORAGE BIN 3 (EUHULLSTORAGE)	JJ	(YES) / NO	0538	1.65	0.2 - 5
PDT-50255-01	HULL STORAGE BIN 4 (EUHULLSTORAGE)	JJ	YES / (NO)			0.2 - 5

NIGHT SHIFT READINGS

Supervisor: [illegible]

Unit ID	Unit Name (Permit Emission Unit)	Operator Initials	Operating Today?	Time of Reading	Pressure Drop (in. W.C.)	
					Reading	Limit
PDT-20840-01	JET DRYER BAGHOUSE A (EUPREP)	JWS	(YES) / NO	1700	5.14	0.5 - 10
PDT-20940-01	JET DRYER BAGHOUSE B (EUPREP)	JWS	(YES) / NO	1700	3.52	0.5 - 10
PDT-21710-01	EXHAUST FILTER (EUPREP)	JWS	(YES) / NO	1700	6.26	0.5 - 10
PDT-21875-01	HULL GRINDING BAGHOUSE (EUHULLGRINDING)	JWS	(YES) / NO	1700	6.65	0.5 - 10
PDT-21690-01	MEAL GRINDING BAGHOUSE (EUMEALGRINDING)	JWS	(YES) / NO	1700	2.82	0.5 - 10
PDT-50225-01	HULL STORAGE BIN 1 (EUHULLSTORAGE)	JWS	YES / (NO)			0.2 - 5
PDT-50235-01	HULL STORAGE BIN 2 (EUHULLSTORAGE)	JM	(YES) / NO	0122	.50	0.2 - 5
PDT-50245-01	HULL STORAGE BIN 3 (EUHULLSTORAGE)	JWS	(YES) / NO	1700	1.47	0.2 - 5
PDT-50255-01	HULL STORAGE BIN 4 (EUHULLSTORAGE)	JWS	YES / (NO)			0.2 - 5

Comments:

DAILY DIFFERENTIAL PRESSURE READINGS
PREP

Date: 8-31-2021

Any units found to be outside of the designated operational limits need prompt reporting and corrective action.

DAY SHIFT READINGS

Supervisor: Seth B

Unit ID	Unit Name (Permit Emission Unit)	Operator Initials	Operating Today?	Time of Reading	Pressure Drop (in. W.C.)	
					Reading	Limit
PDT-20840-01	JET DRYER BAGHOUSE A (EUPREP)	JZC	(YES) / NO	0600	5.04	0.5 - 10
PDT-20940-01	JET DRYER BAGHOUSE B (EUPREP)	JZC	(YES) / NO	0600	3.60	0.5 - 10
PDT-21710-01	EXHAUST FILTER (EUPREP)	JZC	(YES) / NO	0600	6.33	0.5 - 10
PDT-21875-01	HULL GRINDING BAGHOUSE (EUHULLGRINDING)	JZC	(YES) / NO	0600	3.61	0.5 - 10
PDT-21690-01	MEAL GRINDING BAGHOUSE (EUMEALGRINDING)	JZC	(YES) / NO	0600	3.07	0.5 - 10
PDT-50225-01	HULL STORAGE BIN 1 (EUHULLSTORAGE)	JZC	YES / (NO)			0.2 - 5
PDT-50235-01	HULL STORAGE BIN 2 (EUHULLSTORAGE)	JZC	(YES) / NO	0508	0.50	0.2 - 5
PDT-50245-01	HULL STORAGE BIN 3 (EUHULLSTORAGE)	JZC	YES / (NO)			0.2 - 5
PDT-50255-01	HULL STORAGE BIN 4 (EUHULLSTORAGE)	JZC	YES / (NO)			0.2 - 5

NIGHT SHIFT READINGS

Supervisor: [signature]

Unit ID	Unit Name (Permit Emission Unit)	Operator Initials	Operating Today?	Time of Reading	Pressure Drop (in. W.C.)	
					Reading	Limit
PDT-20840-01	JET DRYER BAGHOUSE A (EUPREP)	JM	(YES) / NO	1700	5.18	0.5 - 10
PDT-20940-01	JET DRYER BAGHOUSE B (EUPREP)	JM	(YES) / NO	1700	3.63	0.5 - 10
PDT-21710-01	EXHAUST FILTER (EUPREP)	JM	(YES) / NO	1700	6.32	0.5 - 10
PDT-21875-01	HULL GRINDING BAGHOUSE (EUHULLGRINDING)	JM	(YES) / NO	1700	2.75	0.5 - 10
PDT-21690-01	MEAL GRINDING BAGHOUSE (EUMEALGRINDING)	JM	(YES) / NO	1700	3.15	0.5 - 10
PDT-50225-01	HULL STORAGE BIN 1 (EUHULLSTORAGE)	JM	YES / (NO)			0.2 - 5
PDT-50235-01	HULL STORAGE BIN 2 (EUHULLSTORAGE)	JM	(YES) / NO	1700	0.70	0.2 - 5
PDT-50245-01	HULL STORAGE BIN 3 (EUHULLSTORAGE)	JM	YES / (NO)			0.2 - 5
PDT-50255-01	HULL STORAGE BIN 4 (EUHULLSTORAGE)	JM	YES / (NO)			0.2 - 5

Comments:

WEEKLY AIR MONITORING FORM
PREP OPACITY READINGS

Week of: 08/02/21 - 08/08/21
WEEK STARTS ON MONDAY

Supervisor: Bryan McRae

Operator Initials: TH	**Operator Initials:** TH	**Operator Initials:** TH	**Operator Initials:** TH
Date: 8/8/21	**Date:** 8/8/21	**Date:** 8/8/21	**Date:** 8/8/21
Start Time: 1710	**Start Time:** 1720	**Start Time:** 1710	**Start Time:** 1720

OPACITY Prep Stack SVPREP [limit: Average < 10%]		OPACITY Hull Grinding Baghouse EUHULLGRINDING [limit: Average < 5%]		OPACITY Meal Grinding Baghouse EUMEALGRINDING [limit: Average < 5%]		OPACITY Pelletizing Cyclone EUPELLETIZING [limit: Average < 15%]	
0:00	0 %	0:00	0 %	0:00	0 %	0:00	0 %
0:15	0 %	0:15	0 %	0:15	0 %	0:15	0 %
0:30	0 %	0:30	0 %	0:30	0 %	0:30	0 %
0:45	0 %	0:45	0 %	0:45	0 %	0:45	0 %
1:00	0 %	1:00	0 %	1:00	0 %	1:00	0 %
1:15	0 %	1:15	0 %	1:15	0 %	1:15	0 %
1:30	0 %	1:30	0 %	1:30	0 %	1:30	0 %
1:45	0 %	1:45	0 %	1:45	0 %	1:45	0 %
2:00	0 %	2:00	0 %	2:00	0 %	2:00	0 %
2:15	0 %	2:15	0 %	2:15	0 %	2:15	0 %
2:30	0 %	2:30	0 %	2:30	0 %	2:30	0 %
2:45	0 %	2:45	0 %	2:45	0 %	2:45	0 %
3:00	0 %	3:00	0 %	3:00	0 %	3:00	0 %
3:15	0 %	3:15	0 %	3:15	0 %	3:15	0 %
3:30	0 %	3:30	0 %	3:30	0 %	3:30	0 %
3:45	0 %	3:45	0 %	3:45	0 %	3:45	0 %
4:00	0 %	4:00	0 %	4:00	0 %	4:00	0 %
4:15	0 %	4:15	0 %	4:15	0 %	4:15	0 %
4:30	0 %	4:30	0 %	4:30	0 %	4:30	0 %
4:45	0 %	4:45	0 %	4:45	0 %	4:45	0 %
5:00	0 %	5:00	0 %	5:00	0 %	5:00	0 %
5:15	0 %	5:15	0 %	5:15	0 %	5:15	0 %
5:30	0 %	5:30	0 %	5:30	0 %	5:30	0 %
5:45	0 %	5:45	0 %	5:45	0 %	5:45	0 %
Average	0 %	***Average***	0 %	***Average***	0 %	***Average***	0 %

**Opacity must be observed during daylight hours while the unit is operating.*

Comments/Corrective Actions:

WEEKLY AIR MONITORING FORM
PREP OPACITY READINGS

Week of: 08/09/21 - 08/15/21
WEEK STARTS ON MONDAY

Supervisor: [signature]

Operator Initials: BMO	Operator Initials: BMO	Operator Initials: BMO	Operator Initials: BMO
Date: 08.15.21	Date: 08.15.21	Date: 08.15.21	Date: 08.15.21
Start Time: 1012	Start Time: 1023	Start Time: 1012	Start Time: 1023

OPACITY Prep Stack SVPREP [limit: Average < 10%]		OPACITY Hull Grinding Baghouse EUHULLGRINDING [limit: Average < 5%]		OPACITY Meal Grinding Baghouse EUMEALGRINDING [limit: Average < 5%]		OPACITY Pelletizing Cyclone EUPELLETIZING [limit: Average < 15%]	
0:00	0 %	0:00	0 %	0:00	0 %	0:00	0 %
0:15	0 %	0:15	0 %	0:15	0 %	0:15	0 %
0:30	0 %	0:30	0 %	0:30	0 %	0:30	0 %
0:45	0 %	0:45	0 %	0:45	0 %	0:45	0 %
1:00	0 %	1:00	0 %	1:00	0 %	1:00	0 %
1:15	0 %	1:15	0 %	1:15	0 %	1:15	0 %
1:30	0 %	1:30	0 %	1:30	0 %	1:30	0 %
1:45	0 %	1:45	0 %	1:45	0 %	1:45	0 %
2:00	0 %	2:00	0 %	2:00	0 %	2:00	0 %
2:15	0 %	2:15	0 %	2:15	0 %	2:15	0 %
2:30	0 %	2:30	0 %	2:30	0 %	2:30	0 %
2:45	0 %	2:45	0 %	2:45	0 %	2:45	0 %
3:00	0 %	3:00	0 %	3:00	0 %	3:00	0 %
3:15	0 %	3:15	0 %	3:15	0 %	3:15	0 %
3:30	0 %	3:30	0 %	3:30	0 %	3:30	0 %
3:45	0 %	3:45	0 %	3:45	0 %	3:45	0 %
4:00	0 %	4:00	0 %	4:00	0 %	4:00	0 %
4:15	0 %	4:15	0 %	4:15	0 %	4:15	0 %
4:30	0 %	4:30	0 %	4:30	0 %	4:30	0 %
4:45	0 %	4:45	0 %	4:45	0 %	4:45	0 %
5:00	0 %	5:00	0 %	5:00	0 %	5:00	0 %
5:15	0 %	5:15	0 %	5:15	0 %	5:15	0 %
5:30	0 %	5:30	0 %	5:30	0 %	5:30	0 %
5:45	0 %	5:45	0 %	5:45	0 %	5:45	0 %
Average	0 %	***Average***	0 %	***Average***	0 %	***Average***	0 %

**Opacity must be observed during daylight hours while the unit is operating.*

Comments/Corrective Actions:

WEEKLY AIR MONITORING FORM
PREP OPACITY READINGS

Week of: 8-16-2021
WEEK STARTS ON MONDAY

Supervisor: Bryan McKeef

Operator Initials: SB	Operator Initials: SB	Operator Initials: SB	Operator Initials: SB
Date: 8-22-21	Date: 8-22-21	Date: 8-22-21	Date: 8-22-21
Start Time: 10:00	Start Time: 10:22	Start Time: 10:00	Start Time: 10:22

OPACITY Prep Stack SVPREP		OPACITY Hull Grinding Baghouse EUHULLGRINDING		OPACITY Meal Grinding Baghouse EUMEALGRINDING		OPACITY Pelletizing Cyclone EUPELLETIZING	
[limit: Average < 10%]		[limit: Average < 5%]		[limit: Average < 5%]		[limit: Average < 15%]	
0:00	0 %	0:00	0 %	0:00	0 %	0:00	0 %
0:15	0 %	0:15	0 %	0:15	0 %	0:15	0 %
0:30	0 %	0:30	0 %	0:30	0 %	0:30	0 %
0:45	0 %	0:45	0 %	0:45	0 %	0:45	0 %
1:00	0 %	1:00	0 %	1:00	0 %	1:00	0 %
1:15	0 %	1:15	0 %	1:15	0 %	1:15	0 %
1:30	0 %	1:30	0 %	1:30	0 %	1:30	0 %
1:45	0 %	1:45	0 %	1:45	0 %	1:45	0 %
2:00	0 %	2:00	0 %	2:00	0 %	2:00	0 %
2:15	0 %	2:15	0 %	2:15	0 %	2:15	0 %
2:30	0 %	2:30	0 %	2:30	0 %	2:30	0 %
2:45	0 %	2:45	0 %	2:45	0 %	2:45	0 %
3:00	0 %	3:00	0 %	3:00	0 %	3:00	0 %
3:15	0 %	3:15	0 %	3:15	0 %	3:15	0 %
3:30	0 %	3:30	0 %	3:30	0 %	3:30	0 %
3:45	0 %	3:45	0 %	3:45	0 %	3:45	0 %
4:00	0 %	4:00	0 %	4:00	0 %	4:00	0 %
4:15	0 %	4:15	0 %	4:15	0 %	4:15	0 %
4:30	0 %	4:30	0 %	4:30	0 %	4:30	0 %
4:45	0 %	4:45	0 %	4:45	0 %	4:45	0 %
5:00	0 %	5:00	0 %	5:00	0 %	5:00	0 %
5:15	0 %	5:15	0 %	5:15	0 %	5:15	0 %
5:30	0 %	5:30	0 %	5:30	0 %	5:30	0 %
5:45	0 %	5:45	0 %	5:45	0 %	5:45	0 %
Average	0 %	***Average***	0 %	***Average***	0 %	***Average***	0 %

**Opacity must be observed during daylight hours while the unit is operating.*

Comments/Corrective Actions:

WEEKLY AIR MONITORING FORM
PREP OPACITY READINGS

Week of: 8-23-21
WEEK STARTS ON MONDAY

Supervisor: [signature]

Operator Initials: JJ	**Operator Initials:** JJ	**Operator Initials:** JJ	**Operator Initials:** JJ
Date: 8.28.21	**Date:** 8.28.21	**Date:** 8.28.21	**Date:** 8.28.21
Start Time: 0941	**Start Time:** 0957	**Start Time:** 0941	**Start Time:** 0957

OPACITY Prep Stack SVPREP [limit: Average < 10%]		OPACITY Hull Grinding Baghouse EUHULLGRINDING [limit: Average < 5%]		OPACITY Meal Grinding Baghouse EUMEALGRINDING [limit: Average < 5%]		OPACITY Pelletizing Cyclone EUPELLETIZING [limit: Average < 15%]	
0:00	0 %	0:00	0 %	0:00	0 %	0:00	0 %
0:15	0 %	0:15	0 %	0:15	0 %	0:15	0 %
0:30	0 %	0:30	0 %	0:30	0 %	0:30	0 %
0:45	0 %	0:45	0 %	0:45	0 %	0:45	0 %
1:00	0 %	1:00	0 %	1:00	0 %	1:00	0 %
1:15	0 %	1:15	0 %	1:15	0 %	1:15	0 %
1:30	0 %	1:30	0 %	1:30	0 %	1:30	0 %
1:45	0 %	1:45	0 %	1:45	0 %	1:45	0 %
2:00	0 %	2:00	0 %	2:00	0 %	2:00	0 %
2:15	0 %	2:15	0 %	2:15	0 %	2:15	0 %
2:30	0 %	2:30	0 %	2:30	0 %	2:30	0 %
2:45	0 %	2:45	0 %	2:45	0 %	2:45	0 %
3:00	0 %	3:00	0 %	3:00	0 %	3:00	0 %
3:15	0 %	3:15	0 %	3:15	0 %	3:15	0 %
3:30	0 %	3:30	0 %	3:30	0 %	3:30	0 %
3:45	0 %	3:45	0 %	3:45	0 %	3:45	0 %
4:00	0 %	4:00	0 %	4:00	0 %	4:00	0 %
4:15	0 %	4:15	0 %	4:15	0 %	4:15	0 %
4:30	0 %	4:30	0 %	4:30	0 %	4:30	0 %
4:45	0 %	4:45	0 %	4:45	0 %	4:45	0 %
5:00	0 %	5:00	0 %	5:00	0 %	5:00	0 %
5:15	0 %	5:15	0 %	5:15	0 %	5:15	0 %
5:30	0 %	5:30	0 %	5:30	0 %	5:30	0 %
5:45	0 %	5:45	0 %	5:45	0 %	5:45	0 %
Average	0 %	***Average***	0 %	***Average***	0 %	***Average***	0 %

**Opacity must be observed during daylight hours while the unit is operating.*

Comments/Corrective Actions:

EUDC VOC Emission Calculations

Month	Operating Hours	VOC (tons)	
		Monthly (Emission factor 12.49 lb/h)	12-Month rolling
Aug-2020	744.0	4.65	29.78
Sep-2020	606.0	3.78	33.57
Oct-2020	739.3	4.62	38.18
Nov-2020	712.5	4.45	42.63
Dec-2020	692.5	4.32	46.96
Jan-2021	714.5	4.46	51.42
Feb-2021	670.5	4.19	52.91
Mar-2021	731.7	4.57	52.83
Apr-2021	626.1	3.91	52.55
May-2021	742.3	4.64	52.66
Jun-2021	715.8	4.47	52.63
Jul-2021	734.5	4.59	52.64
Aug-2021	741.0	4.63	52.62
Sep-2021	611.3	3.82	52.66
Oct-2021	741.5	4.63	52.67
Nov-2021	712.5	4.45	52.67
Dec-2021	730.0	4.56	52.90
Jan-2022	737.5	4.61	53.05
Feb-2022	670.9	4.19	53.05
Mar-2022	662.0	4.13	52.62
Apr-2022	570.5	3.56	52.27
May-2022	739.5	4.62	52.25
Jun-2022	714.0	4.46	52.24

EUEXTRACTION VOC Emission Calculations

Month	Operating Hours	VOC (tons)	
		Monthly (Emission factor 0.30 lb/h)	12-Month rolling
Aug-2020	744.0	0.11	0.72
Sep-2020	606.0	0.09	0.81
Oct-2020	739.3	0.11	0.92
Nov-2020	712.5	0.11	1.02
Dec-2020	692.5	0.10	1.13
Jan-2021	714.5	0.11	1.24
Feb-2021	670.5	0.10	1.27
Mar-2021	731.7	0.11	1.27
Apr-2021	626.1	0.09	1.26
May-2021	742.3	0.11	1.26
Jun-2021	715.8	0.11	1.26
Jul-2021	734.5	0.11	1.26
Aug-2021	741.0	0.11	1.26
Sep-2021	611.3	0.09	1.26
Oct-2021	741.5	0.11	1.27
Nov-2021	712.5	0.11	1.27
Dec-2021	730.0	0.11	1.27
Jan-2022	737.5	0.11	1.27
Feb-2022	670.9	0.10	1.27
Mar-2022	662.0	0.10	1.26
Apr-2022	570.5	0.09	1.26
May-2022	739.5	0.11	1.26
Jun-2022	714.0	0.11	1.25

Monthly, 3 Month, and 12 Month Rolling Calculations
Solvent Loss per Ton of Soybeans Processed

The solvent loss per tons of soybeans processed calculation shows the rate at which how many gallons of solvent is lost during soybean processing. This is also referred as the "Solvent Loss Ratio." ZFS Ithaca attempts to keep the value as low as possible, which shows efficiency in the process by using the lowest amount of solvent to process the most amount of soybeans. The ratio can be calculated over a monthly, 3 month, and 12 month time period:

Calculation:

Solvent Loss Ratio

- $Solvent\ Loss\ Ratio = \frac{Total\ Gallons\ Solvent\ Loss\ over\ time\ period}{Total\ Tons\ Soybeans\ Processed\ over\ time\ period}$

Solvent Loss

- Solvent inventory is measured using level sensors in each storage tank.
- $Total\ Solvent\ Loss = (Solvent\ Inventory\ at\ beginning\ of\ time\ period) + (Solvent\ Received\ during\ time\ period) - (Solvent\ Inventory\ at\ end\ of\ time\ period)$

Soybeans Processed

- The amount of soybeans processed is measured on a scale at the beginning of the process. The scale shows the total amount of soybeans fed into the system each day.
- $Total\ Soybeans\ Processed = \sum_{n}^{Last\ Day\ of\ time\ period} Daily\ Soybeans\ Processed$
- $Total\ Soybeans\ Processed = (Soybeans\ Processed\ on\ First\ Day) + (Soybeans\ Processed\ on\ 2nd\ Day) + (etc\ \ldots) + (Soybeans\ Processed\ on\ Last\ Day)$

Other Comments

It should be noted that this calculation applies regardless of the time period in question. Whether the ratio covers a monthly, 3-month, or 12-month time period, the same calculation applies. The calculation is not for determining a "Rolling-Total" or a "Rolling Average." Instead, the calculation provides for a "Rolling-Time Period," meaning at the end of each month, the calculation is completed for the previous 3 and 12 month time period. More details and examples of these calculations are as follows:

Monthly Calculation:

Solvent Loss Ratio

- $Solvent\ Loss\ Ratio = \frac{Total\ Gallons\ Solvent\ Loss\ in\ Month}{Total\ Tons\ Soybeans\ Processed\ in\ Month}$

Solvent Loss

- Solvent inventory is measured using level sensors in each storage tank.
- $Total\ Solvent\ Loss = (Solvent\ Inventory\ on\ 1st\ Day\ of\ Month) +$
  $(Solvent\ Received\ during\ Month) - (Solvent\ Inventory\ on\ Last\ Day\ of\ Month)$

Soybeans Processed

- The amount of soybeans processed is measured on a scale at the beginning of the process. The scale shows the total amount of soybeans fed into the system each day.
- $Total\ Soybeans\ Processed = \sum_{n}^{Last\ Day\ of\ Month} Daily\ Soybeans\ Processed$
- $Total\ Soybeans\ Processed = (Soybeans\ Processed\ on\ First\ Day\ of\ Month) +$
  $(Soybeans\ Processed\ on\ 2nd\ Day\ of\ Month) + (etc\ \ldots) +$
  $(Soybeans\ Processed\ on\ Last\ Day\ of\ Month)$

Example –May 2022

- $Total\ Solvent\ Loss = (Solvent\ Inventory\ on\ 1st\ Day\ of\ May) +$
  $(Solvent\ Received\ during\ May) - (Solvent\ Inventory\ on\ Last\ Day\ of\ May)$
- $Total\ Solvent\ Loss = (10{,}318) + (19{,}667) - (17{,}545)$
- $Total\ Solvent\ Loss = 12{,}440\ gallons$

- $Total\ Soybeans\ Processed = \sum_{n}^{Last\ Day\ of\ May} Daily\ Soybeans\ Processed$
- $Total\ Soybeans\ Processed = \sum_{n}^{31} Daily\ Soybeans\ Processed$
- $Total\ Soybeans\ Processed = (May\ 1\ Total) + (May\ 2\ Total) + \ldots + (May\ 31\ Total)$
- $Total\ Soybeans\ Processed = 114{,}500$ tons

- $Solvent\ Loss\ Ratio = \frac{Total\ Solvent\ Loss}{Total\ Soiybeans\ Processed}$

- $Solvent\ Loss\ Ratio = \frac{12{,}440}{114{,}500}$

- $\boldsymbol{Solvent\ Loss\ Ratio}$ **for May 2022** $= \mathbf{0.109}$

3 Month Rolling Calculation:

Solvent Loss Ratio

- $Solvent\ Loss\ Ratio = \frac{Total\ Gallons\ Solvent\ Loss\ in\ 3\ MONTHS}{Total\ Tons\ Soybeans\ Processed\ in\ 3\ MONTHS}$

Solvent Loss

- Solvent inventory is measured using level sensors in each storage tank.
- $Total\ Solvent\ Loss = (Solvent\ Inventory\ on\ 1st\ Day\ of\ 1st\ Month) + (Solvent\ Received\ during\ 3\ Month\ Period) - (Solvent\ Inventory\ on\ Last\ Day\ of\ 3rd\ Month)$

Soybeans Processed

- The amount of soybeans processed is measured on a scale at the beginning of the process. The scale shows the total amount of soybeans fed into the system each day.
- $Total\ Soybeans\ Processed = \sum_{n}^{Last\ Day\ of\ 3rd\ Month} Daily\ Soybeans\ Processed$
- $Total\ Soybeans\ Processed = (Soybeans\ Processed\ on\ First\ Day\ of\ Month\ 1) + (Soybeans\ Processed\ on\ 2nd\ Day\ of\ Month\ 1) + (etc\ \ldots) + (Soybeans\ Processed\ on\ Last\ Day\ of\ Month\ 3)$

Example – March - May 2022

- $Total\ Solvent\ Loss = (Solvent\ Inventory\ on\ 1st\ Day\ of\ March) + (Solvent\ Received\ in\ March\ through\ May) - (Solvent\ Inventory\ on\ Last\ Day\ of\ May)$
- $Total\ Solvent\ Loss = (20{,}243) + (34{,}462) - (17{,}545)$
- $Total\ Solvent\ Loss = 37{,}160\ gallons$

- $Total\ Soybeans\ Processed = \sum_{n}^{Last\ Day\ of\ 3rd\ Month} Daily\ Soybeans\ Processed$
- $Total\ Soybeans\ Processed = \sum_{n}^{92} Daily\ Soybeans\ Processed$
- $Total\ Soybeans\ Processed = (March\ 1\ Total) + (March\ 2\ Total) + \ldots + (May\ 31\ Total)$
- $Total\ Soybeans\ Processed = 305{,}947$ tons

- $Solvent\ Loss\ Ratio = \frac{Total\ Solvent\ Loss}{Total\ Soiybeans\ Processed}$

- $Solvent\ Loss\ Ratio = \frac{37{,}160}{305{,}947}$

- **3 *Month Solvent Loss Ratio* for May 2022 $= 0.121$**

12 Month Rolling Calculation:

Solvent Loss Ratio

- $Solvent\ Loss\ Ratio = \frac{Total\ Gallons\ Solvent\ Loss\ in\ 12\ MONTHS}{Total\ Tons\ Soybeans\ Processed\ in\ 12\ MONTHS}$

Solvent Loss

- Solvent inventory is measured using level sensors in each storage tank.
- $Total\ Solvent\ Loss = (Solvent\ Inventory\ on\ 1st\ Day\ of\ 1st\ Month) +$
  $(Solvent\ Received\ during\ 12\ Month\ Period) -$
  $(Solvent\ Inventory\ on\ Last\ Day\ of\ 12th\ Month)$

Soybeans Processed

- The amount of soybeans processed is measured on a scale at the beginning of the process. The scale shows the total amount of soybeans fed into the system each day.
- $Total\ Soybeans\ Processed = \sum_{n}^{Last\ Day\ of\ 12th\ Month} Daily\ Soybeans\ Processed$
- $Total\ Soybeans\ Processed = (Soybeans\ Processed\ on\ First\ Day\ of\ Month\ 1) +$
  $(Soybeans\ Processed\ on\ 2nd\ Day\ of\ Month\ 1) + (etc\ \ldots) +$
  $(Soybeans\ Processed\ on\ Last\ Day\ of\ Month\ 12)$

Example – June 2021 - May 2022

- $Total\ Solvent\ Loss = (Solvent\ Inventory\ on\ 1st\ Day\ of\ June\ 2021) +$
  $(Solvent\ Received\ in\ June\ 2021\ through\ May\ 2022) -$
  $(Solvent\ Inventory\ on\ Last\ Day\ of\ May)$
- $Total\ Solvent\ Loss = (27{,}674) + (127{,}489) - (17{,}545)$
- $Total\ Solvent\ Loss = 137{,}618\ gallons$

- $Total\ Soybeans\ Processed = \sum_{n}^{Last\ Day\ of\ 12th\ Month} Daily\ Soybeans\ Processed$
- $Total\ Soybeans\ Processed = \sum_{n}^{365} Daily\ Soybeans\ Processed$
- $Total\ Soybeans\ Processed = (June\ 1\ Total) + (June\ 2\ Total) + \ldots + (May\ 31\ Total)$
- $Total\ Soybeans\ Processed = 1{,}234{,}561$ tons

- $Solvent\ Loss\ Ratio = \frac{Total\ Solvent\ Loss}{Total\ Soybeans\ Processed}$

- $Solvent\ Loss\ Ratio = \frac{137{,}618}{1{,}234{,}561}$

- **12 *Month Solvent Loss Ratio* for May 2022 $= 0.111$**

Comment on EGLE Calculation

Permit 20-17D states the following in regards to the solvent loss per tons of soybeans processed calculation, with emphasis added by ZFS Ithaca:

> *6. After the initial startup period, the permittee shall calculate and record, in a satisfactory manner, the gallons total extraction solvent loss per ton of soybeans processed for FGEXTRACTION on a monthly and **3-month rolling time period basis**, as required by SC II.2. (R 336.1702(a))*
>
> *7. After the initial startup period, the permittee shall calculate and record, in a satisfactory manner, the gallons total extraction solvent loss per ton of soybeans processed for FGEXTRACTION on a monthly and **12-month rolling time period basis**, as required by SC II.3. (R 336.1225, R 336.1702(a))*

In determining the 3 month and 12 month ratio, the time period in question applies to both the solvent usage and soybeans processed over that entire length of time. The permit language does not indicate to sum individual months. A summation would call for a "Rolling Total". Instead, the only place where "rolling" is applied is to the time period in question. This is to clarify that at the end of every month, a new 3-month and 12-month calculation should be completed to incorporate the appropriate prior consecutive months. The "rolling time period" that the permit states is accounted for in the ZFS Ithaca calculations, as all of the data in the time period questioned is used to determine the ratio. Therefore, the calculation is not a sum of individual months of the ratio, but instead the comparison of solvent usage to soybeans processed over the time period:

$$Solvent\ Loss\ Ratio\ in\ Time\ Period = \frac{Gallons\ of\ Solvent\ Lost\ in\ Time\ Period}{Tons\ of\ Soybeans\ Processed\ in\ Time\ Period}$$

Additionally, if the intent of the ratio calculation was a sum of monthly ratios, as EGLE has inferred, the applicable limits would not be sensible. The current limits are:

- 3 Month Rolling Time Period: 0.250 gallon solvent per ton of soybean processed
- 12 Month Rolling Time Period: 0.150 gallon solvent per ton of soybean processed

Given these limits, if the intent was to sum individual months of these ratios, the 12 month limit would be obsolete. The 12 month limit would logically be higher than the 3 month limit if the calculation was based off of a monthly sum. Even if the facility complied with the 3 month rolling limit and achieved a 0.25 using the summation method, the 12 month rolling limit would be exceeded and out of compliance.

The ZFS interpretation of the calculation matches the intent of the limits established. If the facility were to achieve a ratio of 0.20 over the course of 3 months, which complies with the 3 month limit of 0.25, then process improvements would need to be made over the next 9

months to bring the ratio down to meet the 0.15 limit for the 12 month time period. This scenario is achievable and allows the facility to meet the limits. It should also be mentioned that the same rule applies to the ZFS facility in Zeeland Michigan, and the same calculation used for that facility has been acceptable for EGLE through the lifetime of the facility.

Daily Soybeans Processed by FGEXTRACTION	
DATE	**Soybeans Processed (Tons)**
6/1/20	3623.62
6/2/20	3452.11
6/3/20	3639.26
6/4/20	3746.15
6/5/20	3601.20
6/6/20	3412.87
6/7/20	3415.95
6/8/20	3400.38
6/9/20	3413.16
6/10/20	3355.95
6/11/20	3407.81
6/12/20	3426.24
6/13/20	3427.11
6/14/20	3406.53
6/15/20	3400.73
6/16/20	3419.69
6/17/20	3435.11
6/18/20	3429.90
6/19/20	3416.39
6/20/20	3419.77
6/21/20	3431.84
6/22/20	3435.63
6/23/20	3442.16
6/24/20	3423.86
6/25/20	3442.80
6/26/20	3432.11
6/27/20	3445.81
6/28/20	3433.18
6/29/20	3418.90
6/30/20	3430.15
7/1/20	3423.18
7/2/20	3230.73
7/3/20	3016.54
7/4/20	3008.53
7/5/20	3012.72
7/6/20	3009.06
7/7/20	3005.55
7/8/20	3017.92
7/9/20	3015.95
7/10/20	3026.58

7/11/20	3029.13
7/12/20	3008.61
7/13/20	2991.17
7/14/20	2999.37
7/15/20	3021.12
7/16/20	3034.11
7/17/20	3020.97
7/18/20	3043.43
7/19/20	3028.61
7/20/20	3012.69
7/21/20	1610.00
7/22/20	2979.86
7/23/20	3214.23
7/24/20	3326.23
7/25/20	3367.00
7/26/20	3367.19
7/27/20	3531.67
7/28/20	3747.69
7/29/20	3778.61
7/30/20	3772.12
7/31/20	3612.36
8/1/20	3520.72
8/2/20	3518.85
8/3/20	3491.77
8/4/20	3486.20
8/5/20	3480.66
8/6/20	3482.96
8/7/20	3499.79
8/8/20	3468.63
8/9/20	3478.79
8/10/20	3502.98
8/11/20	3376.81
8/12/20	3495.51
8/13/20	3320.28
8/14/20	3372.19
8/15/20	3384.34
8/16/20	3392.03
8/17/20	3339.32
8/18/20	3202.38
8/19/20	3022.04
8/20/20	3023.26
8/21/20	3030.62
8/22/20	3021.55
8/23/20	3032.78
8/24/20	3031.69
8/25/20	3016.28
8/26/20	3044.96

8/27/20	3052.59
8/28/20	3065.74
8/29/20	3052.56
8/30/20	3027.87
8/31/20	3016.82
9/1/20	3010.60
9/2/20	2686.55
9/3/20	2719.43
9/4/20	3012.17
9/5/20	3038.63
9/6/20	3020.85
9/7/20	2958.81
9/8/20	3007.36
9/9/20	3006.47
9/10/20	3107.25
9/11/20	3185.98
9/12/20	3185.55
9/13/20	3198.23
9/14/20	3286.68
9/15/20	3489.71
9/16/20	3164.62
9/17/20	3518.98
9/18/20	3518.27
9/19/20	3507.98
9/20/20	3490.71
9/21/20	480.61
9/22/20	0.00
9/23/20	0.00
9/24/20	0.00
9/25/20	873.33
9/26/20	2978.41
9/27/20	3276.02
9/28/20	3392.30
9/29/20	3329.33
9/30/20	3365.37
10/1/20	3320.39
10/2/20	3403.83
10/3/20	3501.28
10/4/20	3509.34
10/5/20	3501.04
10/6/20	3577.75
10/7/20	3377.37
10/8/20	3587.62
10/9/20	3595.57
10/10/20	3504.00
10/11/20	3484.00
10/12/20	3480.95

10/13/20	3462.71
10/14/20	3535.03
10/15/20	3466.00
10/16/20	3485.79
10/17/20	3547.50
10/18/20	3550.61
10/19/20	3572.89
10/20/20	3314.07
10/21/20	3501.12
10/22/20	3613.77
10/23/20	3674.90
10/24/20	3622.83
10/25/20	3641.90
10/26/20	3644.72
10/27/20	3497.40
10/28/20	3619.25
10/29/20	3604.23
10/30/20	3487.15
10/31/20	3603.83
11/1/20	3591.93
11/2/20	3728.09
11/3/20	3362.79
11/4/20	3674.97
11/5/20	3726.39
11/6/20	3751.75
11/7/20	3743.86
11/8/20	3704.03
11/9/20	3718.26
11/10/20	3743.73
11/11/20	3596.86
11/12/20	3714.65
11/13/20	3690.35
11/14/20	3761.18
11/15/20	3135.66
11/16/20	3755.00
11/17/20	3766.65
11/18/20	3712.84
11/19/20	3728.33
11/20/20	3718.87
11/21/20	3704.71
11/22/20	3700.92
11/23/20	3697.70
11/24/20	3742.33
11/25/20	3762.80
11/26/20	3762.37
11/27/20	3682.32
11/28/20	3742.56

11/29/20	3788.16
11/30/20	3765.20
12/1/20	3738.38
12/2/20	3650.65
12/3/20	3690.27
12/4/20	3615.64
12/5/20	3685.45
12/6/20	3582.30
12/7/20	3733.90
12/8/20	3752.96
12/9/20	3719.99
12/10/20	1866.35
12/11/20	3766.24
12/12/20	3764.00
12/13/20	3748.04
12/14/20	3742.52
12/15/20	3092.40
12/16/20	3694.28
12/17/20	3755.00
12/18/20	3766.33
12/19/20	3751.10
12/20/20	3749.19
12/21/20	3637.96
12/22/20	2516.65
12/23/20	3538.92
12/24/20	3596.03
12/25/20	3611.05
12/26/20	3722.41
12/27/20	3734.99
12/28/20	1934.57
12/29/20	953.09
12/30/20	3330.03
12/31/20	3665.69
1/1/21	3745.50
1/2/21	3755.31
1/3/21	3706.59
1/4/21	2730.14
1/5/21	3560.93
1/6/21	3545.66
1/7/21	3557.95
1/8/21	3661.16
1/9/21	3769.20
1/10/21	3787.67
1/11/21	3767.19
1/12/21	3752.69
1/13/21	3768.34
1/14/21	3769.18

1/15/21	3728.05
1/16/21	3748.91
1/17/21	3743.18
1/18/21	3679.40
1/19/21	2250.28
1/20/21	3020.82
1/21/21	2421.44
1/22/21	3104.73
1/23/21	3514.17
1/24/21	3549.27
1/25/21	3556.81
1/26/21	3522.84
1/27/21	3364.54
1/28/21	3446.64
1/29/21	3551.35
1/30/21	3551.70
1/31/21	3561.42
2/1/21	3588.78
2/2/21	3586.41
2/3/21	3590.08
2/4/21	3492.90
2/5/21	3391.92
2/6/21	3251.70
2/7/21	3243.11
2/8/21	3244.15
2/9/21	3147.54
2/10/21	3082.16
2/11/21	3081.50
2/12/21	3083.25
2/13/21	3082.51
2/14/21	3081.23
2/15/21	3037.90
2/16/21	3001.79
2/17/21	2993.03
2/18/21	2989.75
2/19/21	3006.17
2/20/21	2994.76
2/21/21	3025.64
2/22/21	3042.77
2/23/21	3051.46
2/24/21	2776.77
2/25/21	3016.63
2/26/21	2991.93
2/27/21	3046.13
2/28/21	3058.96
3/1/21	3018.47
3/2/21	3009.56

3/3/21	3021.45
3/4/21	3004.91
3/5/21	3018.04
3/6/21	3010.32
3/7/21	2942.88
3/8/21	2989.37
3/9/21	3044.51
3/10/21	3077.67
3/11/21	2416.54
3/12/21	2905.80
3/13/21	2774.23
3/14/21	2942.89
3/15/21	2965.84
3/16/21	2976.73
3/17/21	2980.03
3/18/21	2967.37
3/19/21	2880.21
3/20/21	2661.00
3/21/21	3015.90
3/22/21	3059.56
3/23/21	3179.02
3/24/21	3195.50
3/25/21	2678.76
3/26/21	3075.36
3/27/21	3173.70
3/28/21	3179.57
3/29/21	3235.72
3/30/21	3277.69
3/31/21	3355.55
4/1/21	3421.46
4/2/21	3459.92
4/3/21	3524.95
4/4/21	3482.30
4/5/21	3486.32
4/6/21	3392.00
4/7/21	3262.79
4/8/21	3537.06
4/9/21	3413.46
4/10/21	3422.38
4/11/21	3475.67
4/12/21	2951.79
4/13/21	3454.25
4/14/21	3389.12
4/15/21	3432.75
4/16/21	3478.73
4/17/21	3515.21
4/18/21	3489.73

4/19/21	575.40
4/20/21	0.00
4/21/21	0.00
4/22/21	0.00
4/23/21	448.99
4/24/21	2638.01
4/25/21	3105.89
4/26/21	3120.43
4/27/21	3378.91
4/28/21	3473.07
4/29/21	3473.66
4/30/21	3415.25
5/1/21	3474.53
5/2/21	3486.32
5/3/21	3480.00
5/4/21	3384.05
5/5/21	3437.39
5/6/21	3364.10
5/7/21	3493.06
5/8/21	3448.81
5/9/21	3540.36
5/10/21	3533.03
5/11/21	3536.67
5/12/21	3543.95
5/13/21	3546.19
5/14/21	3305.62
5/15/21	3566.38
5/16/21	3590.05
5/17/21	3554.05
5/18/21	3588.81
5/19/21	3589.11
5/20/21	3577.60
5/21/21	3514.14
5/22/21	3505.17
5/23/21	3517.44
5/24/21	3516.85
5/25/21	3502.59
5/26/21	3513.31
5/27/21	3478.42
5/28/21	3478.65
5/29/21	3541.08
5/30/21	3548.57
5/31/21	3551.33
6/1/21	3299.01
6/2/21	3086.59
6/3/21	3054.99
6/4/21	3084.70

6/5/21	3076.91
6/6/21	3072.82
6/7/21	3098.56
6/8/21	3096.08
6/9/21	3081.59
6/10/21	3040.02
6/11/21	3050.53
6/12/21	3036.07
6/13/21	3032.52
6/14/21	3040.12
6/15/21	3023.53
6/16/21	3015.16
6/17/21	3045.09
6/18/21	3070.69
6/19/21	2884.83
6/20/21	2783.08
6/21/21	3073.85
6/22/21	3063.79
6/23/21	3061.92
6/24/21	3080.41
6/25/21	3067.37
6/26/21	3036.47
6/27/21	2895.34
6/28/21	3027.26
6/29/21	3024.04
6/30/21	3019.22
7/1/21	3013.81
7/2/21	3008.13
7/3/21	3015.86
7/4/21	3021.19
7/5/21	2775.77
7/6/21	3014.96
7/7/21	3029.27
7/8/21	2904.31
7/9/21	3001.27
7/10/21	2999.37
7/11/21	2995.43
7/12/21	2994.20
7/13/21	2310.32
7/14/21	3020.69
7/15/21	3022.49
7/16/21	3028.19
7/17/21	3026.63
7/18/21	3015.93
7/19/21	3021.98
7/20/21	2994.94
7/21/21	2996.66

7/22/21	3004.16
7/23/21	2819.00
7/24/21	3003.96
7/25/21	3023.94
7/26/21	3011.79
7/27/21	2843.95
7/28/21	3016.90
7/29/21	3093.52
7/30/21	3107.32
7/31/21	3077.66
8/1/21	3091.02
8/2/21	3129.05
8/3/21	3160.00
8/4/21	3176.01
8/5/21	3208.87
8/6/21	3271.22
8/7/21	3265.41
8/8/21	3269.54
8/9/21	3246.35
8/10/21	3254.78
8/11/21	3261.28
8/12/21	3054.01
8/13/21	3292.68
8/14/21	3307.79
8/15/21	3319.31
8/16/21	3110.80
8/17/21	3483.64
8/18/21	3624.32
8/19/21	3688.47
8/20/21	3742.86
8/21/21	3713.92
8/22/21	3710.25
8/23/21	3711.86
8/24/21	3782.98
8/25/21	3788.52
8/26/21	3754.73
8/27/21	3650.16
8/28/21	3784.93
8/29/21	3791.07
8/30/21	3730.11
8/31/21	3748.35
9/1/21	3766.59
9/2/21	3742.32
9/3/21	3793.14
9/4/21	3796.47
9/5/21	3748.44
9/6/21	3751.21

9/7/21	3727.55
9/8/21	3688.50
9/9/21	3691.45
9/10/21	3726.72
9/11/21	3575.54
9/12/21	3764.97
9/13/21	3727.16
9/14/21	3728.69
9/15/21	3732.74
9/16/21	3777.49
9/17/21	3756.05
9/18/21	3734.18
9/19/21	3743.80
9/20/21	581.87
9/21/21	0.00
9/22/21	0.00
9/23/21	0.00
9/24/21	788.38
9/25/21	2993.53
9/26/21	3055.36
9/27/21	2744.56
9/28/21	3148.05
9/29/21	3348.75
9/30/21	3416.55
10/1/21	3516.72
10/2/21	3606.64
10/3/21	3638.02
10/4/21	3657.98
10/5/21	3640.70
10/6/21	3693.15
10/7/21	3731.66
10/8/21	3732.73
10/9/21	3734.31
10/10/21	3728.40
10/11/21	3727.91
10/12/21	3706.45
10/13/21	3708.10
10/14/21	3725.00
10/15/21	3796.28
10/16/21	3783.51
10/17/21	3769.62
10/18/21	3765.00
10/19/21	3311.65
10/20/21	3749.97
10/21/21	3780.23
10/22/21	3759.98
10/23/21	3777.68

10/24/21	3764.99
10/25/21	3762.68
10/26/21	3795.79
10/27/21	3788.65
10/28/21	3797.48
10/29/21	3791.84
10/30/21	3797.93
10/31/21	3792.00
11/1/21	3790.00
11/2/21	3719.98
11/3/21	3743.70
11/4/21	3743.70
11/5/21	3760.20
11/6/21	3756.08
11/7/21	3733.15
11/8/21	3741.07
11/9/21	3746.25
11/10/21	3275.93
11/11/21	3455.54
11/12/21	3737.55
11/13/21	3751.85
11/14/21	3742.90
11/15/21	3763.95
11/16/21	3610.09
11/17/21	3746.31
11/18/21	3604.28
11/19/21	3776.30
11/20/21	3782.06
11/21/21	3781.90
11/22/21	3748.85
11/23/21	3760.23
11/24/21	3763.77
11/25/21	3787.26
11/26/21	3732.35
11/27/21	3769.05
11/28/21	2459.38
11/29/21	2484.41
11/30/21	2830.60
12/1/21	3729.87
12/2/21	3757.27
12/3/21	3774.16
12/4/21	3770.85
12/5/21	3741.62
12/6/21	3760.73
12/7/21	3747.49
12/8/21	3758.24
12/9/21	3766.87

12/10/21	1328.38
12/11/21	3741.04
12/12/21	3672.31
12/13/21	3749.95
12/14/21	3791.34
12/15/21	3787.70
12/16/21	3792.73
12/17/21	3781.44
12/18/21	3745.90
12/19/21	3708.59
12/20/21	3578.07
12/21/21	3080.29
12/22/21	2828.52
12/23/21	3101.40
12/24/21	3533.37
12/25/21	3590.19
12/26/21	3619.41
12/27/21	3134.27
12/28/21	2786.61
12/29/21	2783.47
12/30/21	2788.14
12/31/21	3289.36
1/1/22	3519.35
1/2/22	3592.64
1/3/22	3565.47
1/4/22	3549.24
1/5/22	3549.24
1/6/22	3609.13
1/7/22	3686.60
1/8/22	3670.17
1/9/22	3637.47
1/10/22	3522.12
1/11/22	3613.90
1/12/22	3210.03
1/13/22	3628.29
1/14/22	3681.32
1/15/22	3693.39
1/16/22	3674.06
1/17/22	3665.26
1/18/22	3698.07
1/19/22	3721.26
1/20/22	3757.28
1/21/22	3733.74
1/22/22	3607.05
1/23/22	3634.44
1/24/22	3722.93
1/25/22	3261.11

1/26/22	3323.43
1/27/22	3455.76
1/28/22	3745.20
1/29/22	3718.49
1/30/22	3721.54
1/31/22	3746.54
2/1/22	3729.94
2/2/22	3758.57
2/3/22	3516.57
2/4/22	3713.04
2/5/22	3634.05
2/6/22	3759.82
2/7/22	3760.30
2/8/22	3776.65
2/9/22	3765.68
2/10/22	3774.53
2/11/22	3756.80
2/12/22	3760.37
2/13/22	3742.98
2/14/22	3737.09
2/15/22	3778.77
2/16/22	3779.76
2/17/22	3770.60
2/18/22	3756.92
2/19/22	3765.28
2/20/22	3762.41
2/21/22	3400.96
2/22/22	3738.94
2/23/22	3767.04
2/24/22	3789.00
2/25/22	3780.62
2/26/22	3762.79
2/27/22	3776.64
2/28/22	3721.05
3/1/22	3755.83
3/2/22	3752.63
3/3/22	3770.00
3/4/22	758.73
3/5/22	0.00
3/6/22	194.06
3/7/22	3500.42
3/8/22	3752.73
3/9/22	3766.02
3/10/22	3740.73
3/11/22	3758.10
3/12/22	3748.47
3/13/22	3541.42

3/14/22	3721.31
3/15/22	1307.44
3/16/22	3030.68
3/17/22	3628.81
3/18/22	3747.56
3/19/22	3782.83
3/20/22	3793.48
3/21/22	3750.97
3/22/22	3747.26
3/23/22	3733.29
3/24/22	3723.27
3/25/22	3750.18
3/26/22	3794.68
3/27/22	3721.81
3/28/22	3759.86
3/29/22	3784.02
3/30/22	3793.55
3/31/22	3757.14
4/1/22	3764.80
4/2/22	3790.42
4/3/22	3772.11
4/4/22	3781.01
4/5/22	3742.02
4/6/22	3717.73
4/7/22	3788.66
4/8/22	3707.27
4/9/22	3789.25
4/10/22	3759.93
4/11/22	3753.90
4/12/22	3780.02
4/13/22	3793.60
4/14/22	3771.24
4/15/22	3770.90
4/16/22	3792.47
4/17/22	3793.81
4/18/22	3664.41
4/19/22	3797.55
4/20/22	3796.38
4/21/22	3549.42
4/22/22	3754.29
4/23/22	3794.52
4/24/22	769.02
4/25/22	0.00
4/26/22	0.00
4/27/22	0.00
4/28/22	0.00
4/29/22	0.00

4/30/22	1885.65
5/1/22	3681.48
5/2/22	3703.67
5/3/22	3762.55
5/4/22	3697.22
5/5/22	3704.37
5/6/22	3760.27
5/7/22	3747.07
5/8/22	3705.32
5/9/22	3721.52
5/10/22	3300.73
5/11/22	3713.19
5/12/22	3771.11
5/13/22	3736.03
5/14/22	3774.63
5/15/22	3764.45
5/16/22	3796.86
5/17/22	3438.84
5/18/22	3733.41
5/19/22	3784.63
5/20/22	3567.60
5/21/22	3789.09
5/22/22	3786.06
5/23/22	3021.00
5/24/22	3754.70
5/25/22	3760.72
5/26/22	3796.42
5/27/22	3631.69
5/28/22	3787.97
5/29/22	3789.37
5/30/22	3771.50
5/31/22	3746.05
6/1/22	3804.50
6/2/22	3913.41
6/3/22	3903.70
6/4/22	3910.01
6/5/22	3908.30
6/6/22	3792.70
6/7/22	2726.49
6/8/22	3765.16
6/9/22	3780.41
6/10/22	3786.35
6/11/22	3785.38
6/12/22	3784.36
6/13/22	3818.68
6/14/22	3822.23
6/15/22	3854.00

6/16/22	3829.00
6/17/22	3845.37
6/18/22	3849.69
6/19/22	3863.45
6/20/22	3827.23
6/21/22	3868.42
6/22/22	3937.07
6/23/22	3945.70
6/24/22	3844.39
6/25/22	3808.21
6/26/22	3794.85
6/27/22	3860.17
6/28/22	3987.92
6/29/22	4023.25
6/30/22	4049.27

DAILY AIR MONITORING FORM - EXTRACTION

Date : 2-1-2022

DAY SHIFT READINGS

Lead/Supervisor Name: Mark Shirley

FGEXTRACTION SPARGE DECK TT-31600-32			
Meal Temp. [limit: ≥ 195 °F]			Operator
Time	Status	Temp. °F	Initials
5:00 AM	ON / OFF	225	SB
6:00 AM	ON / OFF	225	SB
7:00 AM	ON / OFF	225	SB
8:00 AM	ON / OFF	224	JCC
9:00 AM	ON / OFF	224	JCC
10:00 AM	ON / OFF	224	JCC
11:00 AM	ON / OFF	224	JCC
12:00 PM	ON / OFF	224	JCC
1:00 PM	ON / OFF	224	JCC
2:00 PM	ON / OFF	224	JCC
3:00 PM	ON / OFF	224	JCC
4:00 PM	ON / OFF	224	JCC

SVEXTRACTION		
% LEL [limit: 50%]		Operator
Time	LEL	Initials
0626	2.75	SB
1054	3.32	JCC
1611	3.82	JCC

NIGHT SHIFT READINGS

Lead/Supervisor Name: Johnny Williams

FGEXTRACTION SPARGE DECK TT-31600-32			
Meal Temp. [limit: ≥ 195 °F]			Operator
Time	Status	Temp. °F	Initials
5:00 PM	ON / OFF	224	JWS
6:00 PM	ON / OFF	225	JWS
7:00 PM	ON / OFF	225	JWS
8:00 PM	ON / OFF	225	JWS
9:00 PM	ON / OFF	225	JWS
10:00 PM	ON / OFF	225	JWS
11:00 PM	ON / OFF	225	JWS
12:00 AM	ON / OFF	225	JWS
1:00 AM	ON / OFF	225	JWS
2:00 AM	ON / OFF	225	JWS
3:00 AM	ON / OFF	225	JWS
4:00 AM	ON / OFF	225	JWS

SVEXTRACTION		
% LEL [limit: 50%]		Operator
Time	LEL	Initials
1705	3.32	JWS
2350	3.46	JWS
0340	3.75	JWS

Comments/Corrective Actions:

DAILY AIR MONITORING FORM - EXTRACTION

Date : 2-2-22

DAY SHIFT READINGS

Lead/Supervisor Name: Bryan McRae

FGEXTRACTION SPARGE DECK TT-31600-32			
Meal Temp. [limit: ≥ 195 °F]			Operator
Time	Status	Temp. °F	Initials
5:00 AM	(ON) / OFF	225	JJ
6:00 AM	(ON) / OFF	225	JJ
7:00 AM	(ON) / OFF	225	JJ
8:00 AM	(ON) / OFF	225	JJ
9:00 AM	(ON) / OFF	225	JJ
10:00 AM	(ON) / OFF	225	JJ
11:00 AM	(ON) / OFF	225	JJ
12:00 PM	(ON) / OFF	225	JJ
1:00 PM	(ON) / OFF	225	JJ
2:00 PM	(ON) / OFF	225	JJ
3:00 PM	(ON) / OFF	225	JJ
4:00 PM	(ON) / OFF	225	JJ

SVEXTRACTION		
% LEL [limit: 50%]		Operator
Time	LEL	Initials
0524	3.75	JJ
1101	3.6	JJ
1612	3.05	JJ

NIGHT SHIFT READINGS

Lead/Supervisor Name: Thomas Nelson

FGEXTRACTION SPARGE DECK TT-31600-32			
Meal Temp. [limit: ≥ 195 °F]			Operator
Time	Status	Temp. °F	Initials
5:00 PM	(ON) / OFF	225	AJ
6:00 PM	(ON) / OFF	225	AJ
7:00 PM	(ON) / OFF	225	AJ
8:00 PM	(ON) / OFF	225	AJ
9:00 PM	(ON) / OFF	225	AJ
10:00 PM	(ON) / OFF	225	AJ
11:00 PM	(ON) / OFF	225	AJ
12:00 AM	(ON) / OFF	225	AJ
1:00 AM	(ON) / OFF	225	AJ
2:00 AM	(ON) / OFF	225	AJ
3:00 AM	(ON) / OFF	225	AJ
4:00 AM	(ON) / OFF	225	AJ

SVEXTRACTION		
% LEL [limit: 50%]		Operator
Time	LEL	Initials
1709	3.04	AJ
0000	3.04	AJ
0400	3.03	AJ

Comments/Corrective Actions:

DAILY AIR MONITORING FORM - EXTRACTION

Date : 2.3.22

DAY SHIFT READINGS

Lead/Supervisor Name: Bryan Mo[illegible]

FGEXTRACTION SPARGE DECK TT-31600-32			
Meal Temp. [limit: ≥ 195 °F]			Operator
Time	Status	Temp. °F	Initials
5:00 AM	(ON) / OFF	226	JJ
6:00 AM	(ON) / OFF	225	JJ
7:00 AM	(ON) / OFF	225	JJ
8:00 AM	(ON) / OFF	226	JJ
9:00 AM	(ON) / OFF	225	JJ
10:00 AM	(ON) / OFF	224	JJ
11:00 AM	(ON) / OFF	225	JJ
12:00 PM	(ON) / OFF	225	JJ
1:00 PM	(ON) / OFF	225	JJ
2:00 PM	(ON) / OFF	225	JJ
3:00 PM	(ON) / OFF	225	JJ
4:00 PM	(ON) / OFF	225	JJ

SVEXTRACTION		
% LEL [limit: 50%]		Operator
Time	LEL	Initials
0519	3.03	JJ
1016	4.3	JJ
1628	2.89	JJ

NIGHT SHIFT READINGS

Lead/Supervisor Name: [illegible]

FGEXTRACTION SPARGE DECK TT-31600-32			
Meal Temp. [limit: ≥ 195 °F]			Operator
Time	Status	Temp. °F	Initials
5:00 PM	(ON) / OFF	225	RC
6:00 PM	(ON) / OFF	225	RC
7:00 PM	(ON) / OFF	225	RC
8:00 PM	(ON) / OFF	225	RC
9:00 PM	(ON) / OFF	225	RC
10:00 PM	(ON) / OFF	226	RC
11:00 PM	(ON) / OFF	226	RC
12:00 AM	(ON) / OFF	223	RC
1:00 AM	(ON) / OFF	223	RC
2:00 AM	(ON) / OFF	223	RC
3:00 AM	(ON) / OFF	225	RC
4:00 AM	(ON) / OFF	223	RC

SVEXTRACTION		
% LEL [limit: 50%]		Operator
Time	LEL	Initials
1730	2.61	RC
2300	3.88	RC
0400	3.74	RC

Comments/Corrective Actions:

DAILY AIR MONITORING FORM - EXTRACTION

Date : 2-4-2022

DAY SHIFT READINGS

Lead/Supervisor Name: [illegible]

FGEXTRACTION SPARGE DECK TT-31600-32			
Meal Temp. [limit: ≥ 195 °F]			Operator
Time	Status	Temp. °F	Initials
5:00 AM	(ON) / OFF	225	JF
6:00 AM	(ON) / OFF	225	JF
7:00 AM	(ON) / OFF	225	JF
8:00 AM	(ON) / OFF	225	JF
9:00 AM	(ON) / OFF	225	JF
10:00 AM	(ON) / OFF	225	JF
11:00 AM	(ON) / OFF	224	JF
12:00 PM	(ON) / OFF	225	JF
1:00 PM	(ON) / OFF	225	JF
2:00 PM	(ON) / OFF	225	JF
3:00 PM	(ON) / OFF	225	JF
4:00 PM	(ON) / OFF	225	JF

SVEXTRACTION		
% LEL [limit: 50%]		Operator
Time	LEL	Initials
0707	3.45	JF
1142	3.60	JF
1600	3.60	JF

NIGHT SHIFT READINGS

Lead/Supervisor Name: [illegible]

FGEXTRACTION SPARGE DECK TT-31600-32			
Meal Temp. [limit: ≥ 195 °F]			Operator
Time	Status	Temp. °F	Initials
5:00 PM	(ON) / OFF	225	JG
6:00 PM	(ON) / OFF	225	JG
7:00 PM	(ON) / OFF	225	JG
8:00 PM	(ON) / OFF	225	JG
9:00 PM	(ON) / OFF	225	JG
10:00 PM	(ON) / OFF	225	JG
11:00 PM	(ON) / OFF	225	JG
12:00 AM	(ON) / OFF	225	JG
1:00 AM	(ON) / OFF	225	JG
2:00 AM	(ON) / OFF	225	JG
3:00 AM	(ON) / OFF	225	JG
4:00 AM	(ON) / OFF	225	JG

SVEXTRACTION		
% LEL [limit: 50%]		Operator
Time	LEL	Initials
1745	3.32	JG
2230	3.46	JG
0145	4.87	JG

Comments/Corrective Actions:

DAILY AIR MONITORING FORM - EXTRACTION

Date : 2/5/22

DAY SHIFT READINGS

Lead/Supervisor Name: [illegible]

FGEXTRACTION SPARGE DECK TT-31600-32			
Meal Temp. [limit: ≥ 195 °F]			Operator
Time	Status	Temp. °F	Initials
5:00 AM	(ON) / OFF	226	BS
6:00 AM	(ON) / OFF	226	BS
7:00 AM	(ON) / OFF	226	BS
8:00 AM	(ON) / OFF	226	BS
9:00 AM	(ON) / OFF	225	BS
10:00 AM	(ON) / OFF	225	BS
11:00 AM	(ON) / OFF	225	BS
12:00 PM	(ON) / OFF	225	BS
1:00 PM	(ON) / OFF	225	BS
2:00 PM	(ON) / OFF	225	BS
3:00 PM	(ON) / OFF	225	BS
4:00 PM	(ON) / OFF	225	BS

SVEXTRACTION		
% LEL [limit: 50%]		Operator
Time	LEL	Initials
0520	4.59	BS
1220	3.46	BS
1630	3.31	BS

NIGHT SHIFT READINGS

Lead/Supervisor Name: [illegible]

FGEXTRACTION SPARGE DECK TT-31600-32			
Meal Temp. [limit: ≥ 195 °F]			Operator
Time	Status	Temp. °F	Initials
5:00 PM	(ON) / OFF	225	JM
6:00 PM	(ON) / OFF	225	JM
7:00 PM	(ON) / OFF	225	JM
8:00 PM	(ON) / OFF	225	JM
9:00 PM	(ON) / OFF	225	JM
10:00 PM	(ON) / OFF	225	JM
11:00 PM	(ON) / OFF	225	JM
12:00 AM	(ON) / OFF	225	JM
1:00 AM	(ON) / OFF	225	JM
2:00 AM	(ON) / OFF	225	JM
3:00 AM	(ON) / OFF	225	JM
4:00 AM	(ON) / OFF	225	JM

SVEXTRACTION		
% LEL [limit: 50%]		Operator
Time	LEL	Initials
1715	3.17	JM
2300	3.03	JM
0345	2.89	JM

Comments/Corrective Actions:

DAILY AIR MONITORING FORM - EXTRACTION

Date : 2/6/2022

DAY SHIFT READINGS

Lead/Supervisor Name: [signature]

FGEXTRACTION SPARGE DECK TT-31600-32			
Meal Temp. [limit: ≥ 195 °F]			Operator
Time	Status	Temp. °F	Initials
5:00 AM	(ON) / OFF	225	JF
6:00 AM	(ON) / OFF	225	JF
7:00 AM	(ON) / OFF	225	JF
8:00 AM	(ON) / OFF	224	JF
9:00 AM	(ON) / OFF	224	JF
10:00 AM	(ON) / OFF	225	JF
11:00 AM	(ON) / OFF	225	JF
12:00 PM	(ON) / OFF	225	JF
1:00 PM	(ON) / OFF	225	JF
2:00 PM	(ON) / OFF	225	JF
3:00 PM	(ON) / OFF	225	JF
4:00 PM	(ON) / OFF	225	JF

SVEXTRACTION		
% LEL [limit: 50%]		Operator
Time	LEL	Initials
0602	3.03	JF
1158	3.32	JF
1610	3.60	JF

NIGHT SHIFT READINGS

Lead/Supervisor Name: [signature]

FGEXTRACTION SPARGE DECK TT-31600-32			
Meal Temp. [limit: ≥ 195 °F]			Operator
Time	Status	Temp. °F	Initials
5:00 PM	(ON) / OFF	225	JWS
6:00 PM	(ON) / OFF	225	JWS
7:00 PM	(ON) / OFF	225	JWS
8:00 PM	(ON) / OFF	225	JWS
9:00 PM	(ON) / OFF	225	JWS
10:00 PM	(ON) / OFF	225	JWS
11:00 PM	(ON) / OFF	225	JWS
12:00 AM	(ON) / OFF	225	JWS
1:00 AM	(ON) / OFF	225	JWS
2:00 AM	(ON) / OFF	225	JWS
3:00 AM	(ON) / OFF	225	JWS
4:00 AM	(ON) / OFF	225	JWS

SVEXTRACTION		
% LEL [limit: 50%]		Operator
Time	LEL	Initials
1715	3.31	JWS
2343	3.46	JWS
0257	3.32	JWS

Comments/Corrective Actions:

DAILY AIR MONITORING FORM - EXTRACTION

Date : 2-7-22

DAY SHIFT READINGS

Lead/Supervisor Name: Bryan McKeefe

FGEXTRACTION SPARGE DECK TT-31600-32			
Meal Temp. [limit: ≥ 195 °F]			Operator
Time	Status	Temp. °F	Initials
5:00 AM	(ON) / OFF	225	JJ
6:00 AM	(ON) / OFF	225	JJ
7:00 AM	(ON) / OFF	225	JJ
8:00 AM	(ON) / OFF	225	JJ
9:00 AM	(ON) / OFF	225	JJ
10:00 AM	(ON) / OFF	225	JJ
11:00 AM	(ON) / OFF	225	JJ
12:00 PM	(ON) / OFF	225	JJ
1:00 PM	(ON) / OFF	225	JJ
2:00 PM	(ON) / OFF	225	JJ
3:00 PM	(ON) / OFF	225	JJ
4:00 PM	(ON) / OFF	225	JJ

SVEXTRACTION		
% LEL [limit: 50%]		Operator
Time	LEL	Initials
0541	3.31	JJ
1136	3.6	JJ
1545	3.89	JJ

NIGHT SHIFT READINGS

Lead/Supervisor Name: Joseph Hoover

FGEXTRACTION SPARGE DECK TT-31600-32			
Meal Temp. [limit: ≥ 195 °F]			Operator
Time	Status	Temp. °F	Initials
5:00 PM	(ON) / OFF	225	AJ
6:00 PM	(ON) / OFF	225	AJ
7:00 PM	(ON) / OFF	225	AJ
8:00 PM	(ON) / OFF	225	AJ
9:00 PM	(ON) / OFF	225	AJ
10:00 PM	(ON) / OFF	225	AJ
11:00 PM	(ON) / OFF	225	AJ
12:00 AM	(ON) / OFF	225	AJ
1:00 AM	(ON) / OFF	225	AJ
2:00 AM	(ON) / OFF	225	AJ
3:00 AM	(ON) / OFF	225	AJ
4:00 AM	(ON) / OFF	224	AJ

SVEXTRACTION		
% LEL [limit: 50%]		Operator
Time	LEL	Initials
1735	3.75	AJ
0102	3.75	AJ
0400	3.61	AJ

Comments/Corrective Actions:

DAILY AIR MONITORING FORM - EXTRACTION

Date : 2-8-22

DAY SHIFT READINGS

Lead/Supervisor Name: Bryan McKay

FGEXTRACTION SPARGE DECK TT-31600-32			
Meal Temp. [limit: ≥ 195 °F]			Operator
Time	Status	Temp. °F	Initials
5:00 AM	(ON) / OFF	225	PS
6:00 AM	(ON) / OFF	225	JJ
7:00 AM	(ON) / OFF	225	JJ
8:00 AM	(ON) / OFF	225	JJ
9:00 AM	(ON) / OFF	225	JJ
10:00 AM	(ON) / OFF	224	JJ
11:00 AM	(ON) / OFF	225	JJ
12:00 PM	(ON) / OFF	225	JJ
1:00 PM	(ON) / OFF	225	JJ
2:00 PM	(ON) / OFF	225	JJ
3:00 PM	(ON) / OFF	224	JJ
4:00 PM	(ON) / OFF	225	JJ

SVEXTRACTION		
% LEL [limit: 50%]		Operator
Time	LEL	Initials
0530	3.60	PS
1100	3.04	JJ
1607	3.03	JJ

NIGHT SHIFT READINGS

Lead/Supervisor Name: [illegible]

FGEXTRACTION SPARGE DECK TT-31600-32			
Meal Temp. [limit: ≥ 195 °F]			Operator
Time	Status	Temp. °F	Initials
5:00 PM	(ON) / OFF	224	RC
6:00 PM	(ON) / OFF	224	RC
7:00 PM	(ON) / OFF	224	RC
8:00 PM	(ON) / OFF	222	RC
9:00 PM	(ON) / OFF	222	RC
10:00 PM	(ON) / OFF	222	RC
11:00 PM	(ON) / OFF	224	RC
12:00 AM	(ON) / OFF	224	RC
1:00 AM	(ON) / OFF	221	RC
2:00 AM	(ON) / OFF	224	RC
3:00 AM	(ON) / OFF	224	RC
4:00 AM	(ON) / OFF	221	RC

SVEXTRACTION		
% LEL [limit: 50%]		Operator
Time	LEL	Initials
1730	2.89	RC
2300	3.03	RC
0400	3.18	RC

Comments/Corrective Actions:

DAILY AIR MONITORING FORM - EXTRACTION

Date : 2-9-2022

DAY SHIFT READINGS

Lead/Supervisor Name: [illegible]

FGEXTRACTION SPARGE DECK TT-31600-32			
Meal Temp. [limit: ≥ 195 °F]			Operator
Time	Status	Temp. °F	Initials
5:00 AM	ON / OFF	225	PS
6:00 AM	ON / OFF	225	PS
7:00 AM	ON / OFF	225	PS
8:00 AM	ON / OFF	225	PS
9:00 AM	ON / OFF	224	PS
10:00 AM	ON / OFF	224	PS
11:00 AM	ON / OFF	224	PS
12:00 PM	ON / OFF	224	PS
1:00 PM	ON / OFF	225	PS
2:00 PM	ON / OFF	224	PS
3:00 PM	ON / OFF	224	PS
4:00 PM	ON / OFF	224	PS

SVEXTRACTION		
% LEL [limit: 50%]		Operator
Time	LEL	Initials
0530	3.31	PS
1230	3.39	PS
1648	3.32	PS

NIGHT SHIFT READINGS

Lead/Supervisor Name: [illegible]

FGEXTRACTION SPARGE DECK TT-31600-32			
Meal Temp. [limit: ≥ 195 °F]			Operator
Time	Status	Temp. °F	Initials
5:00 PM	ON / OFF	224	JG
6:00 PM	ON / OFF	224	JG
7:00 PM	ON / OFF	224	JG
8:00 PM	ON / OFF	224	JG
9:00 PM	ON / OFF	224	JG
10:00 PM	ON / OFF	224	JG
11:00 PM	ON / OFF	224	JG
12:00 AM	ON / OFF	224	JG
1:00 AM	ON / OFF	224	JG
2:00 AM	ON / OFF	224	JG
3:00 AM	ON / OFF	224	JG
4:00 AM	ON / OFF	224	JG

SVEXTRACTION		
% LEL [limit: 50%]		Operator
Time	LEL	Initials
1700	3.32	JG
2400	3.88	JG
0300	3.89	JG

Comments/Corrective Actions:

DAILY AIR MONITORING FORM - EXTRACTION

Date : 2/10/2022

DAY SHIFT READINGS

Lead/Supervisor Name: Seth B

FGEXTRACTION SPARGE DECK TT-31600-32			
Meal Temp. [limit: ≥ 195 °F]			Operator
Time	Status	Temp. °F	Initials
5:00 AM	ON / OFF	224	JF
6:00 AM	ON / OFF	224	JF
7:00 AM	ON / OFF	224	JF
8:00 AM	ON / OFF	224	JF
9:00 AM	ON / OFF	224	JF
10:00 AM	ON / OFF	225	JF
11:00 AM	ON / OFF	225	JF
12:00 PM	ON / OFF	225	JF
1:00 PM	ON / OFF	225	JF
2:00 PM	ON / OFF	225	JF
3:00 PM	ON / OFF	225	JF
4:00 PM	ON / OFF	225	JF

SVEXTRACTION		
% LEL [limit: 50%]		Operator
Time	LEL	Initials
0544	3.89	JF
1238	3.88	JF
1508	3.89	JF

NIGHT SHIFT READINGS

Lead/Supervisor Name: Thomas Williams

FGEXTRACTION SPARGE DECK TT-31600-32			
Meal Temp. [limit: ≥ 195 °F]			Operator
Time	Status	Temp. °F	Initials
5:00 PM	ON / OFF	224	JM
6:00 PM	ON / OFF	224	JM
7:00 PM	ON / OFF	224	JM
8:00 PM	ON / OFF	224	JM
9:00 PM	ON / OFF	224	JM
10:00 PM	ON / OFF	224	JM
11:00 PM	ON / OFF	224	JM
12:00 AM	ON / OFF	224	JM
1:00 AM	ON / OFF	224	JM
2:00 AM	ON / OFF	224	JM
3:00 AM	ON / OFF	224	JM
4:00 AM	ON / OFF	224	JM

SVEXTRACTION		
% LEL [limit: 50%]		Operator
Time	LEL	Initials
1710	3.75	JM
2300	3.17	JM
0330	2.75	JM

Comments/Corrective Actions:

DAILY AIR MONITORING FORM - EXTRACTION

Date : 2-11-22

DAY SHIFT READINGS

Lead/Supervisor Name: Bryan O'Keefe

FGEXTRACTION SPARGE DECK TT-31600-32			
Meal Temp. [limit: ≥ 195 °F]			Operator
Time	Status	Temp. °F	Initials
5:00 AM	(ON) / OFF	224	JJ
6:00 AM	(ON) / OFF	224	JJ
7:00 AM	(ON) / OFF	225	JJ
8:00 AM	(ON) / OFF	224	JJ
9:00 AM	(ON) / OFF	225	JJ
10:00 AM	(ON) / OFF	224	JJ
11:00 AM	(ON) / OFF	225	JJ
12:00 PM	(ON) / OFF	225	JJ
1:00 PM	(ON) / OFF	225	JJ
2:00 PM	(ON) / OFF	224	JJ
3:00 PM	(ON) / OFF	224	JJ
4:00 PM	(ON) / OFF	224	JJ

SVEXTRACTION		
% LEL [limit: 50%]		Operator
Time	LEL	Initials
0516	1.77	JJ
1100	3.15	JJ
1600	3.6	JJ

NIGHT SHIFT READINGS

Lead/Supervisor Name: Joseph Reaves

FGEXTRACTION SPARGE DECK TT-31600-32			
Meal Temp. [limit: ≥ 195 °F]			Operator
Time	Status	Temp. °F	Initials
5:00 PM	(ON) / OFF	224	AJ
6:00 PM	(ON) / OFF	224	AJ
7:00 PM	(ON) / OFF	224	AJ
8:00 PM	(ON) / OFF	224	AJ
9:00 PM	(ON) / OFF	224	AJ
10:00 PM	(ON) / OFF	224	AJ
11:00 PM	(ON) / OFF	225	AJ
12:00 AM	(ON) / OFF	224	AJ
1:00 AM	(ON) / OFF	225	AJ
2:00 AM	(ON) / OFF	225	AJ
3:00 AM	(ON) / OFF	225	AJ
4:00 AM	(ON) / OFF	225	AJ

SVEXTRACTION		
% LEL [limit: 50%]		Operator
Time	LEL	Initials
1731	3.74	AJ
0000	3.33	AJ
0400	3.46	AJ

Comments/Corrective Actions:

DAILY AIR MONITORING FORM - EXTRACTION

Date : 2-12-2022

DAY SHIFT READINGS

Lead/Supervisor Name: Bryan McPeak

FGEXTRACTION SPARGE DECK TT-31600-32			
Meal Temp. [limit: ≥ 195 °F]			Operator
Time	Status	Temp. °F	Initials
5:00 AM	(ON) / OFF	225	ARS
6:00 AM	(ON) / OFF	225	ARS
7:00 AM	(ON) / OFF	225	ARS
8:00 AM	(ON) / OFF	225	ARS
9:00 AM	(ON) / OFF	225	ARS
10:00 AM	(ON) / OFF	225	ARS
11:00 AM	(ON) / OFF	225	ARS
12:00 PM	(ON) / OFF	225	ARS
1:00 PM	(ON) / OFF	225	VD
2:00 PM	(ON) / OFF	225	VD
3:00 PM	(ON) / OFF	225	VD
4:00 PM	(ON) / OFF	225	VD

SVEXTRACTION		
% LEL [limit: 50%]		Operator
Time	LEL	Initials
0517	3.45	ARS
1100	3.60	ARS
1500	4.17	VD

NIGHT SHIFT READINGS

Lead/Supervisor Name: Joseph Lemon

FGEXTRACTION SPARGE DECK TT-31600-32			
Meal Temp. [limit: ≥ 195 °F]			Operator
Time	Status	Temp. °F	Initials
5:00 PM	(ON) / OFF	223	RC
6:00 PM	(ON) / OFF	225	RC
7:00 PM	(ON) / OFF	225	RC
8:00 PM	(ON) / OFF	225	RC
9:00 PM	(ON) / OFF	225	RC
10:00 PM	(ON) / OFF	223	RC
11:00 PM	(ON) / OFF	223	RC
12:00 AM	(ON) / OFF	223	RC
1:00 AM	(ON) / OFF	223	RC
2:00 AM	(ON) / OFF	223	RC
3:00 AM	(ON) / OFF	225	RC
4:00 AM	(ON) / OFF	225	RC

SVEXTRACTION		
% LEL [limit: 50%]		Operator
Time	LEL	Initials
1725	4.17	RC
2301	4.31	RC
0400	3.32	RC

Comments/Corrective Actions:

DAILY AIR MONITORING FORM - EXTRACTION

Date : 2-13-2022

DAY SHIFT READINGS

Lead/Supervisor Name: Bryan McKeef

FGEXTRACTION SPARGE DECK TT-31600-32			
Meal Temp. [limit: ≥ 195 °F]			Operator
Time	Status	Temp. °F	Initials
5:00 AM	(ON) / OFF	225	PMS
6:00 AM	(ON) / OFF	225	PMS
7:00 AM	(ON) / OFF	225	PMS
8:00 AM	(ON) / OFF	225	PMS
9:00 AM	(ON) / OFF	225	PMS
10:00 AM	(ON) / OFF	225	PMS
11:00 AM	(ON) / OFF	225	PMS
12:00 PM	(ON) / OFF	225	PMS
1:00 PM	(ON) / OFF	225	PMS
2:00 PM	(ON) / OFF	225	ARS
3:00 PM	(ON) / OFF	225	ARS
4:00 PM	(ON) / OFF	225	PMS

SVEXTRACTION		
% LEL [limit: 50%]		Operator
Time	LEL	Initials
0542	3.32	PMS
1026	3.32	PMS
1553	3.32	PMS

NIGHT SHIFT READINGS

Lead/Supervisor Name: Jen Kerr

FGEXTRACTION SPARGE DECK TT-31600-32			
Meal Temp. [limit: ≥ 195 °F]			Operator
Time	Status	Temp. °F	Initials
5:00 PM	(ON) / OFF	225	AJ
6:00 PM	(ON) / OFF	225	AJ
7:00 PM	(ON) / OFF	225	AJ
8:00 PM	(ON) / OFF	225	AJ
9:00 PM	(ON) / OFF	225	AJ
10:00 PM	(ON) / OFF	225	AJ
11:00 PM	(ON) / OFF	225	AJ
12:00 AM	(ON) / OFF	225	AJ
1:00 AM	(ON) / OFF	225	AJ
2:00 AM	(ON) / OFF	225	AJ
3:00 AM	(ON) / OFF	225	AJ
4:00 AM	(ON) / OFF	225	AJ

SVEXTRACTION		
% LEL [limit: 50%]		Operator
Time	LEL	Initials
1816	3.32	AJ
0035	3.60	AJ
0424	4.12	AJ

Comments/Corrective Actions:

DAILY AIR MONITORING FORM - EXTRACTION

Date : 2-14-2022

DAY SHIFT READINGS

Lead/Supervisor Name: [illegible]

FGEXTRACTION SPARGE DECK TT-31600-32			
Meal Temp. [limit: ≥ 195 °F]			Operator
Time	Status	Temp. °F	Initials
5:00 AM	ON / OFF	226	PRS
6:00 AM	ON / OFF	226	PRS
7:00 AM	ON / OFF	226	PRS
8:00 AM	ON / OFF	226	PRS
9:00 AM	ON / OFF	225	PRS
10:00 AM	ON / OFF	225	PRS
11:00 AM	ON / OFF	225	PRS
12:00 PM	ON / OFF	225	PRS
1:00 PM	ON / OFF	225	PRS
2:00 PM	ON / OFF	225	PRS
3:00 PM	ON / OFF	225	PRS
4:00 PM	ON / OFF	225	PRS

PRS

SVEXTRACTION		
% LEL [limit: 50%]		Operator
Time	LEL	Initials
0520	3.75	PRS
1230	2.89	PRS
1645	3.03	PRS

NIGHT SHIFT READINGS

Lead/Supervisor Name: [illegible]

FGEXTRACTION SPARGE DECK TT-31600-32			
Meal Temp. [limit: ≥ 195 °F]			Operator
Time	Status	Temp. °F	Initials
5:00 PM	ON / OFF	225	MP
6:00 PM	ON / OFF	225	MP
7:00 PM	ON / OFF	225	MP
8:00 PM	ON / OFF	225	MP
9:00 PM	ON / OFF	226	MP
10:00 PM	ON / OFF	225	MP
11:00 PM	ON / OFF	225	MP
12:00 AM	ON / OFF	225	MP
1:00 AM	ON / OFF	225	MP
2:00 AM	ON / OFF	226	MP
3:00 AM	ON / OFF	226	MP
4:00 AM	ON / OFF	225	MP

SVEXTRACTION		
% LEL [limit: 50%]		Operator
Time	LEL	Initials
1711	3.31	MP
2224	3.74	MP
0318	3.46	MP

Comments/Corrective Actions:

DAILY AIR MONITORING FORM - EXTRACTION

Date : 2-15-2022

DAY SHIFT READINGS

Lead/Supervisor Name: [illegible]

FGEXTRACTION SPARGE DECK TT-31600-32			
Meal Temp. [limit: ≥ 195 °F]			Operator
Time	Status	Temp. °F	Initials
5:00 AM	(ON) / OFF	225	JF
6:00 AM	(ON) / OFF	225	JF
7:00 AM	(ON) / OFF	225	JF
8:00 AM	(ON) / OFF	225	JF
9:00 AM	(ON) / OFF	225	JF
10:00 AM	(ON) / OFF	225	JF
11:00 AM	(ON) / OFF	225	JF
12:00 PM	(ON) / OFF	225	JF
1:00 PM	(ON) / OFF	225	JF
2:00 PM	(ON) / OFF	225	JF
3:00 PM	(ON) / OFF	225	JF
4:00 PM	(ON) / OFF	225	JF

SVEXTRACTION		
% LEL [limit: 50%]		Operator
Time	LEL	Initials
0541	3.60	JF
1056	3.60	JF
1440	3.32	JF

NIGHT SHIFT READINGS

Lead/Supervisor Name: [illegible]

FGEXTRACTION SPARGE DECK TT-31600-32			
Meal Temp. [limit: ≥ 195 °F]			Operator
Time	Status	Temp. °F	Initials
5:00 PM	(ON) / OFF	225	JG
6:00 PM	(ON) / OFF	225	JM
7:00 PM	(ON) / OFF	225	JM
8:00 PM	(ON) / OFF	225	JM
9:00 PM	(ON) / OFF	225	JM
10:00 PM	(ON) / OFF	225	JM
11:00 PM	(ON) / OFF	225	JM
12:00 AM	(ON) / OFF	225	JM
1:00 AM	(ON) / OFF	225	JM
2:00 AM	(ON) / OFF	225	JM
3:00 AM	(ON) / OFF	225	JM
4:00 AM	(ON) / OFF	225	JM

SVEXTRACTION		
% LEL [limit: 50%]		Operator
Time	LEL	Initials
1715	2.89	JG
2315	3.03	JM
0400	3.31	JM

Comments/Corrective Actions:

DAILY AIR MONITORING FORM - EXTRACTION

Date : 2-16-2022

DAY SHIFT READINGS

Lead/Supervisor Name: Bryan McClesh

FGEXTRACTION SPARGE DECK TT-31600-32			
Meal Temp. [limit: ≥ 195 °F]			Operator
Time	Status	Temp. °F	Initials
5:00 AM	(ON) / OFF	224	ARS
6:00 AM	(ON) / OFF	225	ARS
7:00 AM	(ON) / OFF	225	ARS
8:00 AM	(ON) / OFF	224	ARS
9:00 AM	(ON) / OFF	224	ARS
10:00 AM	(ON) / OFF	225	ARS
11:00 AM	(ON) / OFF	224	ARS
12:00 PM	(ON) / OFF	225	ARS
1:00 PM	(ON) / OFF	224	ARS
2:00 PM	(ON) / OFF	224	ARS
3:00 PM	(ON) / OFF	225	ARS
4:00 PM	(ON) / OFF	225	ARS

SVEXTRACTION		
% LEL [limit: 50%]		Operator
Time	LEL	Initials
0500	3.31	ARS
1100	3.32	ARS
1500	3.32	ARS

NIGHT SHIFT READINGS

Lead/Supervisor Name: Joseph Ker

FGEXTRACTION SPARGE DECK TT-31600-32			
Meal Temp. [limit: ≥ 195 °F]			Operator
Time	Status	Temp. °F	Initials
5:00 PM	(ON) / OFF	224	RC
6:00 PM	(ON) / OFF	224	RC
7:00 PM	(ON) / OFF	225	RC
8:00 PM	(ON) / OFF	222	RC
9:00 PM	(ON) / OFF	222	RC
10:00 PM	(ON) / OFF	222	RC
11:00 PM	(ON) / OFF	224	RC
12:00 AM	(ON) / OFF	222	RC
1:00 AM	(ON) / OFF	222	RC
2:00 AM	(ON) / OFF	222	RC
3:00 AM	(ON) / OFF	222	RC
4:00 AM	(ON) / OFF	222	RC

SVEXTRACTION		
% LEL [limit: 50%]		Operator
Time	LEL	Initials
1725	3.46	RC
2200	3.46	RC
0400	4.59	RC

Comments/Corrective Actions:

DAILY AIR MONITORING FORM - EXTRACTION

Date : 2/17/2022

DAY SHIFT READINGS

Lead/Supervisor Name: Seth B

FGEXTRACTION SPARGE DECK TT-31600-32			
Meal Temp. [limit: ≥ 195 °F]			Operator
Time	Status	Temp. °F	Initials
5:00 AM	(ON) / OFF	225	PMS
6:00 AM	(ON) / OFF	225	PMS
7:00 AM	(ON) / OFF	225	PMS
8:00 AM	(ON) / OFF	225	PMS
9:00 AM	(ON) / OFF	225	PMS
10:00 AM	(ON) / OFF	225	PMS
11:00 AM	(ON) / OFF	225	PMS
12:00 PM	(ON) / OFF	225	PMS
1:00 PM	(ON) / OFF	225	PMS
2:00 PM	(ON) / OFF	224	PMS
3:00 PM	(ON) / OFF	224	PMS
4:00 PM	(ON) / OFF	224	PMS

SVEXTRACTION		
% LEL [limit: 50%]		Operator
Time	LEL	Initials
0515	3.60	PMS
1000	3.32	PMS
1511	3.04	PMS

NIGHT SHIFT READINGS

Lead/Supervisor Name: Joseph Keeran

FGEXTRACTION SPARGE DECK TT-31600-32			
Meal Temp. [limit: ≥ 195 °F]			Operator
Time	Status	Temp. °F	Initials
5:00 PM	(ON) / OFF	224	AJ
6:00 PM	(ON) / OFF	224	AJ
7:00 PM	(ON) / OFF	224	AJ
8:00 PM	(ON) / OFF	225	AJ
9:00 PM	(ON) / OFF	225	AJ
10:00 PM	(ON) / OFF	225	AJ
11:00 PM	(ON) / OFF	225	AJ
12:00 AM	(ON) / OFF	225	AJ
1:00 AM	(ON) / OFF	224	AJ
2:00 AM	(ON) / OFF	224	AJ
3:00 AM	(ON) / OFF	224	AJ
4:00 AM	(ON) / OFF	224	AJ

SVEXTRACTION		
% LEL [limit: 50%]		Operator
Time	LEL	Initials
1715	3.32	AJ
0130	3.04	AJ
0400	3.60	AJ

Comments/Corrective Actions:

DAILY AIR MONITORING FORM - EXTRACTION

Date : 2/18/2022

DAY SHIFT READINGS

Lead/Supervisor Name: Seth B

FGEXTRACTION SPARGE DECK TT-31600-32			
Meal Temp. [limit: ≥ 195 °F]			Operator
Time	Status	Temp. °F	Initials
5:00 AM	(ON) / OFF	225	PRS
6:00 AM	(ON) / OFF	225	PRS
7:00 AM	(ON) / OFF	225	PRS
8:00 AM	(ON) / OFF	225	PRS
9:00 AM	(ON) / OFF	225	PRS
10:00 AM	(ON) / OFF	225	PRS
11:00 AM	(ON) / OFF	225	PRS
12:00 PM	(ON) / OFF	225	PRS
1:00 PM	(ON) / OFF	225	PRS
2:00 PM	(ON) / OFF	225	PRS
3:00 PM	(ON) / OFF	225	PRS
4:00 PM	(ON) / OFF	225	PRS

SVEXTRACTION		
% LEL [limit: 50%]		Operator
Time	LEL	Initials
0523	3.60	PRS
1245	3.32	PRS
1630	2.62	PRS

NIGHT SHIFT READINGS

Lead/Supervisor Name: Thomas Mapp

FGEXTRACTION SPARGE DECK TT-31600-32			
Meal Temp. [limit: ≥ 195 °F]			Operator
Time	Status	Temp. °F	Initials
5:00 PM	(ON) / OFF	225	JM
6:00 PM	(ON) / OFF	224	MP
7:00 PM	(ON) / OFF	224	MP
8:00 PM	(ON) / OFF	224	MP
9:00 PM	(ON) / OFF	224	MP
10:00 PM	(ON) / OFF	224	MP
11:00 PM	(ON) / OFF	224	MP
12:00 AM	(ON) / OFF	224	MP
1:00 AM	(ON) / OFF	225	MP
2:00 AM	(ON) / OFF	224	MP
3:00 AM	(ON) / OFF	225	MP
4:00 AM	(ON) / OFF	225	MP

SVEXTRACTION		
% LEL [limit: 50%]		Operator
Time	LEL	Initials
1710	2.33	JM
2239	2.61	MP
0311	2.75	MP

Comments/Corrective Actions:

1

DAILY AIR MONITORING FORM - EXTRACTION

Date : 2/19/2022

DAY SHIFT READINGS

Lead/Supervisor Name: Scott D

FGEXTRACTION SPARGE DECK TT-31600-32			
Meal Temp. [limit: ≥ 195 °F]			Operator
Time	Status	Temp. °F	Initials
5:00 AM	(ON) / OFF	225	JF
6:00 AM	(ON) / OFF	225	JF
7:00 AM	(ON) / OFF	225	JF
8:00 AM	(ON) / OFF	225	JF
9:00 AM	(ON) / OFF	225	JF
10:00 AM	(ON) / OFF	225	JF
11:00 AM	(ON) / OFF	225	JF
12:00 PM	(ON) / OFF	225	JF
1:00 PM	(ON) / OFF	225	JF
2:00 PM	(ON) / OFF	225	JF
3:00 PM	(ON) / OFF	225	JF
4:00 PM	(ON) / OFF	225	JF

SVEXTRACTION		
% LEL [limit: 50%]		Operator
Time	LEL	Initials
0555	2.89	JF
1116	3.31	JF
1607	3.60	JF

NIGHT SHIFT READINGS

Lead/Supervisor Name: Thomas Edwards

FGEXTRACTION SPARGE DECK TT-31600-32			
Meal Temp. [limit: ≥ 195 °F]			Operator
Time	Status	Temp. °F	Initials
5:00 PM	(ON) / OFF	226	JG
6:00 PM	(ON) / OFF	225	JG
7:00 PM	(ON) / OFF	225	JG
8:00 PM	(ON) / OFF	225	JG
9:00 PM	(ON) / OFF	225	JG
10:00 PM	(ON) / OFF	225	JG
11:00 PM	(ON) / OFF	225	JG
12:00 AM	(ON) / OFF	225	JG
1:00 AM	(ON) / OFF	225	JG
2:00 AM	(ON) / OFF	225	JG
3:00 AM	(ON) / OFF	225	JG
4:00 AM	(ON) / OFF	225	JG

SVEXTRACTION		
% LEL [limit: 50%]		Operator
Time	LEL	Initials
1715	3.88	JG
2300	2.89	JG
0345	2.75	JG

Comments/Corrective Actions:

DAILY AIR MONITORING FORM - EXTRACTION

Date : 2/20/2022

DAY SHIFT READINGS

Lead/Supervisor Name: [illegible]

FGEXTRACTION SPARGE DECK TT-31600-32			
Meal Temp. [limit: ≥ 195 °F]			Operator
Time	Status	Temp. °F	Initials
5:00 AM	(ON) / OFF	225	PRS
6:00 AM	(ON) / OFF	225	PRS
7:00 AM	(ON) / OFF	225	PRS
8:00 AM	(ON) / OFF	225	PRS
9:00 AM	(ON) / OFF	225	PRS
10:00 AM	(ON) / OFF	225	PRS
11:00 AM	(ON) / OFF	225	PRS
12:00 PM	(ON) / OFF	225	PRS
1:00 PM	(ON) / OFF	225	PRS
2:00 PM	(ON) / OFF	225	PRS
3:00 PM	(ON) / OFF	225	PRS
4:00 PM	(ON) / OFF	225	PRS

SVEXTRACTION		
% LEL [limit: 50%]		Operator
Time	LEL	Initials
0520	2.89	PRS
1230	3.32	PRS
1640	3.6	PRS

NIGHT SHIFT READINGS

Lead/Supervisor Name: [illegible]

FGEXTRACTION SPARGE DECK TT-31600-32			
Meal Temp. [limit: ≥ 195 °F]			Operator
Time	Status	Temp. °F	Initials
5:00 PM	(ON) / OFF	225	JM
6:00 PM	(ON) / OFF	225	JM
7:00 PM	(ON) / OFF	225	JM
8:00 PM	(ON) / OFF	225	JM
9:00 PM	(ON) / OFF	225	JM
10:00 PM	(ON) / OFF	225	JM
11:00 PM	(ON) / OFF	225	JM
12:00 AM	(ON) / OFF	225	JM
1:00 AM	(ON) / OFF	225	JM
2:00 AM	(ON) / OFF	225	JM
3:00 AM	(ON) / OFF	225	JM
4:00 AM	(ON) / OFF	225	JM

SVEXTRACTION		
% LEL [limit: 50%]		Operator
Time	LEL	Initials
1720	3.74	JM
2300	3.89	JM
0430	2.90	JM

Comments/Corrective Actions:

DAILY AIR MONITORING FORM - EXTRACTION

Date : 2-21-22

DAY SHIFT READINGS

Lead/Supervisor Name: Bryan [illegible]

FGEXTRACTION SPARGE DECK TT-31600-32			
Meal Temp. [limit: ≥ 195 °F]			Operator
Time	Status	Temp. °F	Initials
5:00 AM	ON / OFF	225	VD
6:00 AM	ON / OFF	225	VD
7:00 AM	ON / OFF	224	VD
8:00 AM	ON / OFF	224	VD
9:00 AM	ON / OFF	224	VD
10:00 AM	ON / OFF	224	VD
11:00 AM	ON / OFF	224	VD
12:00 PM	ON / OFF		VD
1:00 PM	ON / OFF	225	VD
2:00 PM	ON / OFF	225	VD
3:00 PM	ON / OFF	225	VD
4:00 PM	ON / OFF	225	VD

SVEXTRACTION		
% LEL [limit: 50%]		Operator
Time	LEL	Initials
0544	2.75	VD
1155	3.12	VD
1509	4.44	VD

NIGHT SHIFT READINGS

Lead/Supervisor Name: [illegible]

FGEXTRACTION SPARGE DECK TT-31600-32			
Meal Temp. [limit: ≥ 195 °F]			Operator
Time	Status	Temp. °F	Initials
5:00 PM	ON / OFF	222	RC
6:00 PM	ON / OFF	222	RC
7:00 PM	ON / OFF	222	RC
8:00 PM	ON / OFF	222	RC
9:00 PM	ON / OFF	225	RC
10:00 PM	ON / OFF	222	RC
11:00 PM	ON / OFF	222	RC
12:00 AM	ON / OFF	222	RC
1:00 AM	ON / OFF	223	RC
2:00 AM	ON / OFF	223	RC
3:00 AM	ON / OFF	222	RC
4:00 AM	ON / OFF	222	RC

SVEXTRACTION		
% LEL [limit: 50%]		Operator
Time	LEL	Initials
1945	3.03	RC
2423	3.46	RC
0400	4.02	RC

Comments/Corrective Actions:

- Days shut plant down @ 1200.

DAILY AIR MONITORING FORM - EXTRACTION

Date : 2/22/22

DAY SHIFT READINGS

Lead/Supervisor Name: Joseph Keezer

FGEXTRACTION SPARGE DECK TT-31600-32			
Meal Temp. [limit: ≥ 195 °F]			Operator
Time	Status	Temp. °F	Initials
5:00 AM	(ON) / OFF	224	BMD
6:00 AM	(ON) / OFF	224	BMD
7:00 AM	(ON) / OFF	224	BMD
8:00 AM	(ON) / OFF	224	BMD
9:00 AM	(ON) / OFF	224	BMD
10:00 AM	(ON) / OFF	224	BMD
11:00 AM	(ON) / OFF	224	BMD
12:00 PM	(ON) / OFF	224	BMD
1:00 PM	(ON) / OFF	224	BMD
2:00 PM	(ON) / OFF	223	BMD
3:00 PM	(ON) / OFF	224	BMD
4:00 PM	(ON) / OFF	224	BMD

SVEXTRACTION		
% LEL [limit: 50%]		Operator
Time	LEL	Initials
0537	4.17	BMD
1032	3.03	BMD
1547	3.60	BMD

NIGHT SHIFT READINGS

Lead/Supervisor Name: Joseph Keezer

FGEXTRACTION SPARGE DECK TT-31600-32			
Meal Temp. [limit: ≥ 195 °F]			Operator
Time	Status	Temp. °F	Initials
5:00 PM	(ON) / OFF	222	RC
6:00 PM	(ON) / OFF	222	RC
7:00 PM	(ON) / OFF	222	RC
8:00 PM	(ON) / OFF	223	RC
9:00 PM	(ON) / OFF	223	RC
10:00 PM	(ON) / OFF	223	RC
11:00 PM	(ON) / OFF	223	RC
12:00 AM	(ON) / OFF	223	RC
1:00 AM	(ON) / OFF	223	RC
2:00 AM	(ON) / OFF	223	RC
3:00 AM	(ON) / OFF	223	RC
4:00 AM	(ON) / OFF	223	RC

SVEXTRACTION		
% LEL [limit: 50%]		Operator
Time	LEL	Initials
1710	3.74	RC
2400	3.85	RC
0400	3.75	RC

Comments/Corrective Actions:

DAILY AIR MONITORING FORM - EXTRACTION

Date : 2/23/22

DAY SHIFT READINGS

Lead/Supervisor Name: Bryan M O'Keefe

FGEXTRACTION SPARGE DECK TT-31600-32			
Meal Temp. [limit: ≥ 195 °F]			Operator
Time	Status	Temp. °F	Initials
5:00 AM	ON / OFF	225	JF
6:00 AM	ON / OFF	225	JF
7:00 AM	ON / OFF	225	JF
8:00 AM	ON / OFF	225	JF
9:00 AM	ON / OFF	225	JF
10:00 AM	ON / OFF	225	JF
11:00 AM	ON / OFF	225	JF
12:00 PM	ON / OFF	225	JF
1:00 PM	ON / OFF	225	JF
2:00 PM	ON / OFF	225	JF
3:00 PM	ON / OFF	225	JF
4:00 PM	ON / OFF	225	JF

SVEXTRACTION		
% LEL [limit: 50%]		Operator
Time	LEL	Initials
0525	3.60	JF
1100	4.16	JF
1508	3.88	JF

NIGHT SHIFT READINGS

Lead/Supervisor Name: [illegible]

FGEXTRACTION SPARGE DECK TT-31600-32			
Meal Temp. [limit: ≥ 195 °F]			Operator
Time	Status	Temp. °F	Initials
5:00 PM	ON / OFF	225	AJ
6:00 PM	ON / OFF	225	AJ
7:00 PM	ON / OFF	225	AJ
8:00 PM	ON / OFF	226	AJ
9:00 PM	ON / OFF	225	AJ
10:00 PM	ON / OFF	225	AJ
11:00 PM	ON / OFF	226	AJ
12:00 AM	ON / OFF	225	AJ
1:00 AM	ON / OFF	225	AJ
2:00 AM	ON / OFF	225	AJ
3:00 AM	ON / OFF	225	AJ
4:00 AM	ON / OFF	225	AJ

SVEXTRACTION		
% LEL [limit: 50%]		Operator
Time	LEL	Initials
1725	3.60	AJ
2313	3.46	AJ
0400	3.32	AJ

Comments/Corrective Actions:

DAILY AIR MONITORING FORM - EXTRACTION

Date : 2/24/22

DAY SHIFT READINGS

Lead/Supervisor Name: Bryan McKeef

FGEXTRACTION SPARGE DECK TT-31600-32			
Meal Temp. [limit: ≥ 195 °F]			Operator
Time	Status	Temp. °F	Initials
5:00 AM	(ON) / OFF	226	PRS
6:00 AM	(ON) / OFF	226	PRS
7:00 AM	(ON) / OFF	226	PRS
8:00 AM	(ON) / OFF	226	PRS
9:00 AM	(ON) / OFF	226	PRS
10:00 AM	(ON) / OFF	226	PRS
11:00 AM	(ON) / OFF	226	PRS
12:00 PM	(ON) / OFF	225	PRS
1:00 PM	(ON) / OFF	225	PRS
2:00 PM	(ON) / OFF	225	PRS
3:00 PM	(ON) / OFF	225	PRS
4:00 PM	(ON) / OFF	225	PRS

SVEXTRACTION		
% LEL [limit: 50%]		Operator
Time	LEL	Initials
0520	3.18	PRS
1150	2.75	PRS
1600	2.89	PRS

NIGHT SHIFT READINGS

Lead/Supervisor Name: Adams Adams

FGEXTRACTION SPARGE DECK TT-31600-32			
Meal Temp. [limit: ≥ 195 °F]			Operator
Time	Status	Temp. °F	Initials
5:00 PM	(ON) / OFF	225	MP
6:00 PM	(ON) / OFF	225	MP
7:00 PM	(ON) / OFF	225	MP
8:00 PM	(ON) / OFF	225	MP
9:00 PM	(ON) / OFF	225	MP
10:00 PM	(ON) / OFF	225	MP
11:00 PM	(ON) / OFF	225	MP
12:00 AM	(ON) / OFF	225	MP
1:00 AM	(ON) / OFF	225	MP
2:00 AM	(ON) / OFF	225	TH
3:00 AM	(ON) / OFF	224	TH
4:00 AM	(ON) / OFF	224	TH

SVEXTRACTION		
% LEL [limit: 50%]		Operator
Time	LEL	Initials
1715	2.75	MP
2210	2.75	MP
0305	2.47	TH

Comments/Corrective Actions:

DAILY AIR MONITORING FORM - EXTRACTION

Date : 2-25-22

DAY SHIFT READINGS

Lead/Supervisor Name: Bryan M. Ortega

FGEXTRACTION SPARGE DECK TT-31600-32			
Meal Temp. [limit: ≥ 195 °F]			Operator
Time	Status	Temp. °F	Initials
5:00 AM	(ON) / OFF	225	AAS
6:00 AM	(ON) / OFF	223	AAS
7:00 AM	(ON) / OFF	223	AAS
8:00 AM	(ON) / OFF	223	AAS
9:00 AM	(ON) / OFF	223	AAS
10:00 AM	(ON) / OFF	223	AAS
11:00 AM	(ON) / OFF	223	AAS
12:00 PM	(ON) / OFF	225	AAS
1:00 PM	(ON) / OFF	226	AAS
2:00 PM	(ON) / OFF	225	AAS
3:00 PM	(ON) / OFF	225	AAS
4:00 PM	(ON) / OFF	225	AAS

SVEXTRACTION		
% LEL [limit: 50%]		Operator
Time	LEL	Initials
0521	3.03	AAS
1223	3.88	AAS
1500	3.88	AAS

NIGHT SHIFT READINGS

Lead/Supervisor Name: [signature]

FGEXTRACTION SPARGE DECK TT-31600-32			
Meal Temp. [limit: ≥ 195 °F]			Operator
Time	Status	Temp. °F	Initials
5:00 PM	(ON) / OFF	224	RC
6:00 PM	(ON) / OFF	224	RC
7:00 PM	(ON) / OFF	224	RC
8:00 PM	(ON) / OFF	223	RC
9:00 PM	(ON) / OFF	224	RC
10:00 PM	(ON) / OFF	223	RC
11:00 PM	(ON) / OFF	224	RC
12:00 AM	(ON) / OFF	224	RC
1:00 AM	(ON) / OFF	225	RC
2:00 AM	(ON) / OFF	225	RC
3:00 AM	(ON) / OFF	223	RC
4:00 AM	(ON) / OFF	225	RC

SVEXTRACTION		
% LEL [limit: 50%]		Operator
Time	LEL	Initials
1730	3.88	RC
2400	4.30	RC
0400	4.13	RC

Comments/Corrective Actions:

DAILY AIR MONITORING FORM - EXTRACTION

Date : 2-26-22

DAY SHIFT READINGS

Lead/Supervisor Name: Bryan McRae

FGEXTRACTION SPARGE DECK TT-31600-32			
Meal Temp. [limit: ≥ 195 °F]			Operator
Time	Status	Temp. °F	Initials
5:00 AM	(ON) / OFF	225	PMS
6:00 AM	(ON) / OFF	225	PMS
7:00 AM	(ON) / OFF	225	PMS
8:00 AM	(ON) / OFF	225	PMS
9:00 AM	(ON) / OFF	225	PMS
10:00 AM	(ON) / OFF	225	PMS
11:00 AM	(ON) / OFF	225	PMS
12:00 PM	(ON) / OFF	225	PMS
1:00 PM	(ON) / OFF	224	PMS
2:00 PM	(ON) / OFF	225	PMS
3:00 PM	(ON) / OFF	225	PMS
4:00 PM	(ON) / OFF	225	PMS

SVEXTRACTION		
% LEL [limit: 50%]		Operator
Time	LEL	Initials
0510	3.88	PMS
1023	4.58	PMS
1507	4.31	PMS

NIGHT SHIFT READINGS

Lead/Supervisor Name: Jon Lem

FGEXTRACTION SPARGE DECK TT-31600-32			
Meal Temp. [limit: ≥ 195 °F]			Operator
Time	Status	Temp. °F	Initials
5:00 PM	(ON) / OFF	224	AJ
6:00 PM	(ON) / OFF	224	AJ
7:00 PM	(ON) / OFF	224	AJ
8:00 PM	(ON) / OFF	224	AJ
9:00 PM	(ON) / OFF	225	AJ
10:00 PM	(ON) / OFF	224	AJ
11:00 PM	(ON) / OFF	225	AJ
12:00 AM	(ON) / OFF	224	AJ
1:00 AM	(ON) / OFF	224	AJ
2:00 AM	(ON) / OFF	225	AJ
3:00 AM	(ON) / OFF	225	AJ
4:00 AM	(ON) / OFF	225	AJ

SVEXTRACTION		
% LEL [limit: 50%]		Operator
Time	LEL	Initials
1716	4.02	AJ
0004	4.58	AJ
0400	4.44	AJ

Comments/Corrective Actions:

DAILY AIR MONITORING FORM - EXTRACTION

Date : 2-27-22

DAY SHIFT READINGS

Lead/Supervisor Name: Bryan McKeefer

FGEXTRACTION SPARGE DECK TT-31600-32			
Meal Temp. [limit: ≥ 195 °F]			Operator
Time	Status	Temp. °F	Initials
5:00 AM	(ON) / OFF	225	ARS
6:00 AM	(ON) / OFF	224	ARS
7:00 AM	(ON) / OFF	224	ARS
8:00 AM	(ON) / OFF	224	ARS
9:00 AM	(ON) / OFF	225	ARS
10:00 AM	(ON) / OFF	224	ARS
11:00 AM	(ON) / OFF	225	ARS
12:00 PM	(ON) / OFF	225	ARS
1:00 PM	(ON) / OFF	225	ARS
2:00 PM	(ON) / OFF	225	ARS
3:00 PM	(ON) / OFF	225	ARS
4:00 PM	(ON) / OFF	225	ARS

SVEXTRACTION		
% LEL [limit: 50%]		Operator
Time	LEL	Initials
0512	4.59	ARS
1142	4.45	ARS
1522	4.17	ARS

NIGHT SHIFT READINGS

Lead/Supervisor Name: Joseph Lerner

FGEXTRACTION SPARGE DECK TT-31600-32			
Meal Temp. [limit: ≥ 195 °F]			Operator
Time	Status	Temp. °F	Initials
5:00 PM	(ON) / OFF	223	RC
6:00 PM	(ON) / OFF	224	RC
7:00 PM	(ON) / OFF	223	RC
8:00 PM	(ON) / OFF	224	RC
9:00 PM	(ON) / OFF	223	RC
10:00 PM	(ON) / OFF	223	RC
11:00 PM	(ON) / OFF	223	RC
12:00 AM	(ON) / OFF	223	RC
1:00 AM	(ON) / OFF	223	RC
2:00 AM	(ON) / OFF	223	RC
3:00 AM	(ON) / OFF	223	RC
4:00 AM	(ON) / OFF	223	RC

SVEXTRACTION		
% LEL [limit: 50%]		Operator
Time	LEL	Initials
1730	4.17	RC
2400	3.88	RC
0400	4.03	RC

Comments/Corrective Actions:

DAILY AIR MONITORING FORM - EXTRACTION

Date : 2-28-2022

DAY SHIFT READINGS

Lead/Supervisor Name: Josh N

FGEXTRACTION SPARGE DECK TT-31600-32			
Meal Temp. [limit: ≥ 195 °F]			Operator
Time	Status	Temp. °F	Initials
5:00 AM	(ON) / OFF	225	JF
6:00 AM	(ON) / OFF	225	JF
7:00 AM	(ON) / OFF	225	JF
8:00 AM	(ON) / OFF	225	JF
9:00 AM	(ON) / OFF	225	JF
10:00 AM	(ON) / OFF	224	JF
11:00 AM	(ON) / OFF	225	~~JF~~JF
12:00 PM	(ON) / OFF	225	JF
1:00 PM	(ON) / OFF	224	JF
2:00 PM	(ON) / OFF	224	JF
3:00 PM	(ON) / OFF	224	JF
4:00 PM	(ON) / OFF	225	JF

SVEXTRACTION		
% LEL [limit: 50%]		Operator
Time	LEL	Initials
0600	3.60	JF
1131	3.61	JF
1512	4.17	JF

NIGHT SHIFT READINGS

Lead/Supervisor Name: Thomas Holmes

FGEXTRACTION SPARGE DECK TT-31600-32			
Meal Temp. [limit: ≥ 195 °F]			Operator
Time	Status	Temp. °F	Initials
5:00 PM	(ON) / OFF	224	JM
6:00 PM	(ON) / OFF	224	JM
7:00 PM	(ON) / OFF	224	JM
8:00 PM	(ON) / OFF	224	JM
9:00 PM	(ON) / OFF	224	JM
10:00 PM	(ON) / OFF	224	JM
11:00 PM	(ON) / OFF	224	JM
12:00 AM	(ON) / OFF	224	JM
1:00 AM	(ON) / OFF	224	JM
2:00 AM	(ON) / OFF	225	JM
3:00 AM	(ON) / OFF	225	TH
4:00 AM	(ON) / OFF	225	TH

SVEXTRACTION		
% LEL [limit: 50%]		Operator
Time	LEL	Initials
1730	4.16	JM
2300	4.17	JM
0420	4.59	TH

Comments/Corrective Actions:

DAILY AIR MONITORING FORM - EXTRACTION

Date : 08/01/2021

DAY SHIFT READINGS

Lead/Supervisor Name: Jr Herrera

FGEXTRACTION SPARGE DECK TT-31600-32			
Meal Temp. [limit: ≥ 195 °F]			Operator
Time	Status	Temp. °F	Initials
5:00 AM	(ON) / OFF	224	BMO
6:00 AM	(ON) / OFF	224	BMO
7:00 AM	(ON) / OFF	224	BMO
8:00 AM	(ON) / OFF	224	BMO
9:00 AM	(ON) / OFF	224	BMO
10:00 AM	(ON) / OFF	224	BMO
11:00 AM	(ON) / OFF	224	BMO
12:00 PM	(ON) / OFF	224	BMO
1:00 PM	(ON) / OFF	224	BMO
2:00 PM	(ON) / OFF	224	BMO
3:00 PM	(ON) / OFF	224	BMO
4:00 PM	(ON) / OFF	224	BMO

SVEXTRACTION		
% LEL [limit: 50%]		Operator
Time	LEL	Initials
0502	7.01	BMO
1002	6.57	BMO
1508	4.90	BMO

NIGHT SHIFT READINGS

Lead/Supervisor Name: Thomas Holcomb

FGEXTRACTION SPARGE DECK TT-31600-32			
Meal Temp. [limit: ≥ 195 °F]			Operator
Time	Status	Temp. °F	Initials
5:00 PM	(ON) / OFF	225	TH
6:00 PM	(ON) / OFF	225	JF
7:00 PM	(ON) / OFF	225	JF
8:00 PM	(ON) / OFF	225	JF
9:00 PM	(ON) / OFF	225	JF
10:00 PM	(ON) / OFF	225	JF
11:00 PM	(ON) / OFF	225	JF
12:00 AM	(ON) / OFF	225	JF
1:00 AM	(ON) / OFF	225	JF
2:00 AM	(ON) / OFF	225	JF
3:00 AM	(ON) / OFF	225	JF
4:00 AM	(ON) / OFF	225	JF

SVEXTRACTION		
% LEL [limit: 50%]		Operator
Time	LEL	Initials
1726	5.18	TH
2312	6.04	JF
0323	6.87	JF

Comments/Corrective Actions:

DAILY AIR MONITORING FORM - EXTRACTION

Date : 8-2-21

DAY SHIFT READINGS

Lead/Supervisor Name: [illegible]

FGEXTRACTION SPARGE DECK TT-31600-32			
Meal Temp. [limit: ≥ 195 °F]			Operator
Time	Status	Temp. °F	Initials
5:00 AM	(ON) / OFF	225	MW
6:00 AM	(ON) / OFF	225	MW
7:00 AM	(ON) / OFF	225	MW
8:00 AM	(ON) / OFF	225	MW
9:00 AM	(ON) / OFF	225	MW
10:00 AM	(ON) / OFF	225	MW
11:00 AM	(ON) / OFF	225	MW
12:00 PM	(ON) / OFF	225	MW
1:00 PM	(ON) / OFF	225	MW
2:00 PM	(ON) / OFF	225	MW
3:00 PM	(ON) / OFF	224	MW
4:00 PM	(ON) / OFF	224	MW

SVEXTRACTION		
% LEL [limit: 50%]		Operator
Time	LEL	Initials
0539	7.0	MW
1200	7.5	MW
1600	6.4	MW

NIGHT SHIFT READINGS

Lead/Supervisor Name: [illegible]

FGEXTRACTION SPARGE DECK TT-31600-32			
Meal Temp. [limit: ≥ 195 °F]			Operator
Time	Status	Temp. °F	Initials
5:00 PM	(ON) / OFF	225	MP
6:00 PM	(ON) / OFF	225	MP
7:00 PM	(ON) / OFF	225	MP
8:00 PM	(ON) / OFF	225	MP
9:00 PM	(ON) / OFF	225	MP
10:00 PM	(ON) / OFF	225	MP
11:00 PM	(ON) / OFF	225	MP
12:00 AM	(ON) / OFF	225	MP
1:00 AM	(ON) / OFF	225	MP
2:00 AM	(ON) / OFF	225	MP
3:00 AM	(ON) / OFF	225	MP
4:00 AM	(ON) / OFF	225	MP

SVEXTRACTION		
% LEL [limit: 50%]		Operator
Time	LEL	Initials
1718	7.02	MP
2244	6.04	MP
0300	6.31	MP

Comments/Corrective Actions:

DAILY AIR MONITORING FORM - EXTRACTION

Date : 8-3-21

DAY SHIFT READINGS

Lead/Supervisor Name: [illegible]

FGEXTRACTION SPARGE DECK TT-31600-32			
Meal Temp. [limit: ≥ 195 °F]			Operator
Time	Status	Temp. °F	Initials
5:00 AM	(ON) / OFF	225	MW
6:00 AM	(ON) / OFF	225	MW
7:00 AM	(ON) / OFF	225	MW
8:00 AM	(ON) / OFF	225	MW
9:00 AM	(ON) / OFF	225	MW
10:00 AM	(ON) / OFF	225	MW
11:00 AM	(ON) / OFF	225	MW
12:00 PM	(ON) / OFF	225	MW
1:00 PM	(ON) / OFF	225	MW
2:00 PM	(ON) / OFF	225	MW
3:00 PM	(ON) / OFF	225	MW
4:00 PM	(ON) / OFF	225	MW

SVEXTRACTION		
% LEL [limit: 50%]		Operator
Time	LEL	Initials
0570	5.9	MW
1130	7.0	MW
1400	6.5	MW

NIGHT SHIFT READINGS

Lead/Supervisor Name: [illegible]

FGEXTRACTION SPARGE DECK TT-31600-32			
Meal Temp. [limit: ≥ 195 °F]			Operator
Time	Status	Temp. °F	Initials
5:00 PM	(ON) / OFF	224	JM
6:00 PM	(ON) / OFF	225	JM
7:00 PM	(ON) / OFF	225	JM
8:00 PM	(ON) / OFF	224	JM
9:00 PM	(ON) / OFF	224	JM
10:00 PM	(ON) / OFF	224	JM
11:00 PM	(ON) / OFF	224	JM
12:00 AM	(ON) / OFF	225	JM
1:00 AM	(ON) / OFF	225	JM
2:00 AM	(ON) / OFF	225	JM
3:00 AM	(ON) / OFF	225	JM
4:00 AM	(ON) / OFF	225	JM

SVEXTRACTION		
% LEL [limit: 50%]		Operator
Time	LEL	Initials
1730	6.03	JM
2300	5.75	JM
0400	5.74	JM

Comments/Corrective Actions:

DAILY AIR MONITORING FORM - EXTRACTION

Date : 08/04/2021

DAY SHIFT READINGS

Lead/Supervisor Name: Thomas Nelson

FGEXTRACTION SPARGE DECK TT-31600-32			
Meal Temp. [limit: ≥ 195 °F]			Operator
Time	Status	Temp. °F	Initials
5:00 AM	(ON) / OFF	224	BMO
6:00 AM	(ON) / OFF	225	BMO
7:00 AM	(ON) / OFF	224	BMO
8:00 AM	(ON) / OFF	225	BMO
9:00 AM	(ON) / OFF	225	BMO
10:00 AM	(ON) / OFF	225	BMO
11:00 AM	(ON) / OFF	224	BMO
12:00 PM	(ON) / OFF	224	BMO
1:00 PM	(ON) / OFF	225	BMO
2:00 PM	(ON) / OFF	224	BMO
3:00 PM	(ON) / OFF	224	BMO
4:00 PM	(ON) / OFF	225	BMO

SVEXTRACTION		
% LEL [limit: 50%]		Operator
Time	LEL	Initials
0540	5.32	BMO
1000	6.45	BMO
1506	7.73	BMO

NIGHT SHIFT READINGS

Lead/Supervisor Name: Thomas Nelson

FGEXTRACTION SPARGE DECK TT-31600-32			
Meal Temp. [limit: ≥ 195 °F]			Operator
Time	Status	Temp. °F	Initials
5:00 PM	(ON) / OFF	225	
6:00 PM	(ON) / OFF	225	
7:00 PM	(ON) / OFF	225	
8:00 PM	(ON) / OFF	225	
9:00 PM	(ON) / OFF	225	
10:00 PM	(ON) / OFF	225	
11:00 PM	(ON) / OFF	225	
12:00 AM	(ON) / OFF	225	
1:00 AM	(ON) / OFF	225	
2:00 AM	(ON) / OFF	225	
3:00 AM	(ON) / OFF	225	
4:00 AM	(ON) / OFF	225	

SVEXTRACTION		
% LEL [limit: 50%]		Operator
Time	LEL	Initials
1735	7.07	
2300	6.4	
0330	5.61	

Comments/Corrective Actions:

DAILY AIR MONITORING FORM - EXTRACTION

Date : 08/05/2021

DAY SHIFT READINGS

Lead/Supervisor Name: [illegible]

FGEXTRACTION SPARGE DECK TT-31600-32			
Meal Temp. [limit: ≥ 195 °F]			Operator
Time	Status	Temp. °F	Initials
5:00 AM	(ON) / OFF	224	BMO
6:00 AM	(ON) / OFF	225	BMO
7:00 AM	(ON) / OFF	225	BMO
8:00 AM	(ON) / OFF	225	BMO
9:00 AM	(ON) / OFF	224	BMO
10:00 AM	(ON) / OFF	225	BMO
11:00 AM	(ON) / OFF	224	BMO
12:00 PM	(ON) / OFF	224	BMO
1:00 PM	(ON) / OFF	224	BMO
2:00 PM	(ON) / OFF	224	BMO
3:00 PM	(ON) / OFF	224	BMO
4:00 PM	(ON) / OFF	224	BMO

SVEXTRACTION		
% LEL [limit: 50%]		Operator
Time	LEL	Initials
0525	6.03	BMO
1017	7.72	BMO
1553	7.72	BMO

NIGHT SHIFT READINGS

Lead/Supervisor Name: [illegible]

FGEXTRACTION SPARGE DECK TT-31600-32			
Meal Temp. [limit: ≥ 195 °F]			Operator
Time	Status	Temp. °F	Initials
5:00 PM	(ON) / OFF	225	JF
6:00 PM	(ON) / OFF	224.7	JF
7:00 PM	(ON) / OFF	224.8	JF
8:00 PM	(ON) / OFF	225	JF
9:00 PM	(ON) / OFF	225	JF
10:00 PM	(ON) / OFF	225	JF
11:00 PM	(ON) / OFF	225	JF
12:00 AM	(ON) / OFF	225	JF
1:00 AM	(ON) / OFF	225	JF
2:00 AM	(ON) / OFF	225	JF
3:00 AM	(ON) / OFF	225	JF
4:00 AM	(ON) / OFF	225	JF

SVEXTRACTION		
% LEL [limit: 50%]		Operator
Time	LEL	Initials
1716	7.58	JF
2223	7.03	JF
0122	6.87	JF

Comments/Corrective Actions:

DAILY AIR MONITORING FORM - EXTRACTION

Date : 8-6-21

DAY SHIFT READINGS

Lead/Supervisor Name: [illegible]

FGEXTRACTION SPARGE DECK TT-31600-32			
Meal Temp. [limit: ≥ 195 °F]			Operator
Time	Status	Temp. °F	Initials
5:00 AM	ON / OFF	224	JJ
6:00 AM	ON / OFF	224	JJ
7:00 AM	ON / OFF	224	JJ
8:00 AM	ON / OFF	224	JJ
9:00 AM	ON / OFF	224	JJ
10:00 AM	ON / OFF	224	JJ
11:00 AM	ON / OFF	224	JJ
12:00 PM	ON / OFF	224	JJ
1:00 PM	ON / OFF	224	JJ
2:00 PM	ON / OFF	225	JJ
3:00 PM	ON / OFF	225	JJ
4:00 PM	ON / OFF	224	JJ

SVEXTRACTION		
% LEL [limit: 50%]		Operator
Time	LEL	Initials
0635	7.29	JJ
1115	8.14	JJ
0429	5.47	JJ

NIGHT SHIFT READINGS

Lead/Supervisor Name: [illegible]

FGEXTRACTION SPARGE DECK TT-31600-32			
Meal Temp. [limit: ≥ 195 °F]			Operator
Time	Status	Temp. °F	Initials
5:00 PM	ON / OFF	~~223~~ 224	[illegible]
6:00 PM	ON / OFF	225	[illegible]
7:00 PM	ON / OFF	224	MP
8:00 PM	ON / OFF	224	MP
9:00 PM	ON / OFF	224	MP
10:00 PM	ON / OFF	225	MP
11:00 PM	ON / OFF	224	MP
12:00 AM	ON / OFF	225	MP
1:00 AM	ON / OFF	225	MP
2:00 AM	ON / OFF	224	MP
3:00 AM	ON / OFF	224	MP
4:00 AM	ON / OFF	224	MP

SVEXTRACTION		
% LEL [limit: 50%]		Operator
Time	LEL	Initials
1742	5.47	[illegible]
2258	5.18	MP
0301	5.19	MP

Comments/Corrective Actions:

DAILY AIR MONITORING FORM - EXTRACTION

Date : 8.7.21

DAY SHIFT READINGS
Lead/Supervisor Name: [illegible]

FGEXTRACTION SPARGE DECK TT-31600-32			
Meal Temp. [limit: ≥ 195 °F]			Operator
Time	Status	Temp. °F	Initials
5:00 AM	(ON) / OFF	224	JJ
6:00 AM	(ON) / OFF	224	JJ
7:00 AM	(ON) / OFF	224	JJ
8:00 AM	(ON) / OFF	224	JJ
9:00 AM	(ON) / OFF	224	JJ
10:00 AM	(ON) / OFF	225	JJ
11:00 AM	(ON) / OFF	224	JJ
12:00 PM	(ON) / OFF	224	JJ
1:00 PM	(ON) / OFF	224	JJ
2:00 PM	(ON) / OFF	225	JJ
3:00 PM	(ON) / OFF	225	JJ
4:00 PM	(ON) / OFF	225	JJ

SVEXTRACTION		
% LEL [limit: 50%]		Operator
Time	LEL	Initials
0605	6.17	JJ
1018	6.04	JJ
1523	6.31	JJ

NIGHT SHIFT READINGS
Lead/Supervisor Name: Thomas Holcomb

FGEXTRACTION SPARGE DECK TT-31600-32			
Meal Temp. [limit: ≥ 195 °F]			Operator
Time	Status	Temp. °F	Initials
5:00 PM	(ON) / OFF	224	JM
6:00 PM	(ON) / OFF	224	JM
7:00 PM	(ON) / OFF	224	JM
8:00 PM	(ON) / OFF	224	JM
9:00 PM	(ON) / OFF	224	JM
10:00 PM	(ON) / OFF	224	JM
11:00 PM	(ON) / OFF	224	JM
12:00 AM	(ON) / OFF	224	JM
1:00 AM	(ON) / OFF	224	JM
2:00 AM	(ON) / OFF	224	JM
3:00 AM	(ON) / OFF	224	JM
4:00 AM	(ON) / OFF	224	JM

SVEXTRACTION		
% LEL [limit: 50%]		Operator
Time	LEL	Initials
1730	5.19	JM
2300	5.47	JM
0400	5.43	JM

Comments/Corrective Actions:

DAILY AIR MONITORING FORM - EXTRACTION

Date : 08/08/2021

DAY SHIFT READINGS

Lead/Supervisor Name: [illegible]

FGEXTRACTION SPARGE DECK TT-31600-32			
Meal Temp. [limit: ≥ 195 °F]			Operator
Time	Status	Temp. °F	Initials
5:00 AM	(ON) / OFF	224	BMD
6:00 AM	(ON) / OFF	224	BMD
7:00 AM	(ON) / OFF	224	BMD
8:00 AM	(ON) / OFF	224	BMD
9:00 AM	(ON) / OFF	224	BMD
10:00 AM	(ON) / OFF	224	BMD
11:00 AM	(ON) / OFF	224	BMD
12:00 PM	(ON) / OFF	224	BMD
1:00 PM	(ON) / OFF	224	BMD
2:00 PM	(ON) / OFF	224	BMD
3:00 PM	(ON) / OFF	224	BMD
4:00 PM	(ON) / OFF	224	BMD

SVEXTRACTION		
% LEL [limit: 50%]		Operator
Time	LEL	Initials
0539	5.47	BMD
1100	6.17	BMD
1538	7.58	BMD

NIGHT SHIFT READINGS

Lead/Supervisor Name: Thomas Williams

FGEXTRACTION SPARGE DECK TT-31600-32			
Meal Temp. [limit: ≥ 195 °F]			Operator
Time	Status	Temp. °F	Initials
5:00 PM	(ON) / OFF	224	MP
6:00 PM	(ON) / OFF	224	MP
7:00 PM	(ON) / OFF	224	MP
8:00 PM	(ON) / OFF	224	MP
9:00 PM	(ON) / OFF	224	MP
10:00 PM	(ON) / OFF	224	MP
11:00 PM	(ON) / OFF	224	MP
12:00 AM	(ON) / OFF	224	MP
1:00 AM	(ON) / OFF	224	MP
2:00 AM	(ON) / OFF	224	MP
3:00 AM	(ON) / OFF	224	MP
4:00 AM	(ON) / OFF	225	MP

SVEXTRACTION		
% LEL [limit: 50%]		Operator
Time	LEL	Initials
1712	7.30	MP
2200	5.61	MP
0302	5.89	MP

Comments/Corrective Actions:

DAILY AIR MONITORING FORM - EXTRACTION

Date : 08/09/2021

DAY SHIFT READINGS

Lead/Supervisor Name: Joseph Hessen

FGEXTRACTION SPARGE DECK TT-31600-32			
Meal Temp. [limit: ≥ 195 °F]			Operator
Time	Status	Temp. °F	Initials
5:00 AM	(ON) / OFF	224	BMD
6:00 AM	(ON) / OFF	224	BMD
7:00 AM	(ON) / OFF	224	BMD
8:00 AM	(ON) / OFF	224	BMD
9:00 AM	(ON) / OFF	224	BMD
10:00 AM	(ON) / OFF	224	BMD
11:00 AM	(ON) / OFF	224	BMD
12:00 PM	(ON) / OFF	224	BMD
1:00 PM	(ON) / OFF	224	BMD
2:00 PM	(ON) / OFF	224	BMD
3:00 PM	(ON) / OFF	224	BMD
4:00 PM	(ON) / OFF	224	BMD

SVEXTRACTION		
% LEL [limit: 50%]		Operator
Time	LEL	Initials
0504	6.87	BMD
1008	6.87	BMD
1503	4.94	BMD

NIGHT SHIFT READINGS

Lead/Supervisor Name: Bryan O'Neal

FGEXTRACTION SPARGE DECK TT-31600-32			
Meal Temp. [limit: ≥ 195 °F]			Operator
Time	Status	Temp. °F	Initials
5:00 PM	(ON) / OFF	225	
6:00 PM	(ON) / OFF	224	
7:00 PM	(ON) / OFF	224	
8:00 PM	(ON) / OFF	224	
9:00 PM	(ON) / OFF	224	
10:00 PM	(ON) / OFF	224	
11:00 PM	(ON) / OFF	225	
12:00 AM	(ON) / OFF	225	
1:00 AM	(ON) / OFF	225	
2:00 AM	(ON) / OFF	224	
3:00 AM	(ON) / OFF	224	
4:00 AM	(ON) / OFF	224	

SVEXTRACTION		
% LEL [limit: 50%]		Operator
Time	LEL	Initials
1724	5.05	
2226	5.90	
0317	6.13	

Comments/Corrective Actions:

DAILY AIR MONITORING FORM - EXTRACTION

Date : 08/10/2021

DAY SHIFT READINGS

Lead/Supervisor Name: John Heaver

FGEXTRACTION SPARGE DECK TT-31600-32			
Meal Temp. [limit: ≥ 195 °F]			Operator
Time	Status	Temp. °F	Initials
5:00 AM	(ON) / OFF	224	BMO
6:00 AM	(ON) / OFF	224	BMO
7:00 AM	(ON) / OFF	224	BMO
8:00 AM	(ON) / OFF	224	BMO
9:00 AM	(ON) / OFF	224	BMO
10:00 AM	(ON) / OFF	224	BMO
11:00 AM	(ON) / OFF	224	BMO
12:00 PM	(ON) / OFF	224	BMO
1:00 PM	(ON) / OFF	224	BMO
2:00 PM	(ON) / OFF	224	BMO
3:00 PM	(ON) / OFF	224	BMO
4:00 PM	(ON) / OFF	224	BMO

SVEXTRACTION		
% LEL [limit: 50%]		Operator
Time	LEL	Initials
0503	6.17	BMO
1052	4.20	BMO
1505	5.75	BMO

NIGHT SHIFT READINGS

Lead/Supervisor Name: John Heaver

FGEXTRACTION SPARGE DECK TT-31600-32			
Meal Temp. [limit: ≥ 195 °F]			Operator
Time	Status	Temp. °F	Initials
5:00 PM	(ON) / OFF	224.4	JF
6:00 PM	(ON) / OFF	224.8	JF
7:00 PM	(ON) / OFF	224.7	JF
8:00 PM	(ON) / OFF	224.4	JF
9:00 PM	(ON) / OFF	224.6	JF
10:00 PM	(ON) / OFF	224.5	JF
11:00 PM	(ON) / OFF	224.5	JF
12:00 AM	(ON) / OFF	224.4	JF
1:00 AM	(ON) / OFF	224.4	JF
2:00 AM	(ON) / OFF	224.3	JF
3:00 AM	(ON) / OFF	224.5	JF
4:00 AM	(ON) / OFF	224.6	JF

SVEXTRACTION		
% LEL [limit: 50%]		Operator
Time	LEL	Initials
~~JF 1719~~	4.91	JF
2306	4.90	JF
0131	4.48	JF

Comments/Corrective Actions:

DAILY AIR MONITORING FORM - EXTRACTION

Date : 8-11-2021

DAY SHIFT READINGS

Lead/Supervisor Name: [illegible]

FGEXTRACTION SPARGE DECK TT-31600-32			
Meal Temp. [limit: ≥ 195 °F]			Operator
Time	Status	Temp. °F	Initials
5:00 AM	(ON) / OFF	224	JZC
6:00 AM	(ON) / OFF	224	JZC
7:00 AM	(ON) / OFF	224	JZC
8:00 AM	(ON) / OFF	224	JZC
9:00 AM	(ON) / OFF	224	JZC
10:00 AM	(ON) / OFF	224	JZC
11:00 AM	(ON) / OFF	224	JZC
12:00 PM	(ON) / OFF	224	JZC
1:00 PM	(ON) / OFF	224	JZC
2:00 PM	(ON) / OFF	224	JZC
3:00 PM	(ON) / OFF	224	JZC
4:00 PM	(ON) / OFF	224	JZC

SVEXTRACTION		
% LEL [limit: 50%]		Operator
Time	LEL	Initials
0800	4.34	JZC
1200	5.89	JZC
1600	6.31	JZC

NIGHT SHIFT READINGS

Lead/Supervisor Name: [illegible]

FGEXTRACTION SPARGE DECK TT-31600-32			
Meal Temp. [limit: ≥ 195 °F]			Operator
Time	Status	Temp. °F	Initials
5:00 PM	(ON) / OFF	224	MP
6:00 PM	(ON) / OFF	224	MP
7:00 PM	(ON) / OFF	224	MP
8:00 PM	(ON) / OFF	224	MP
9:00 PM	(ON) / OFF	224	MP
10:00 PM	(ON) / OFF	224	MP
11:00 PM	(ON) / OFF	224	MP
12:00 AM	(ON) / OFF	224	MP
1:00 AM	(ON) / OFF	224	MP
2:00 AM	ON / (OFF)		MP
3:00 AM	(ON) / OFF	224	MP
4:00 AM	ON / (OFF)		MP

SVEXTRACTION		
% LEL [limit: 50%]		Operator
Time	LEL	Initials
1703	6.45	MP
2223	6.03	MP
0344	2.65	MP

Comments/Corrective Actions:

* PLANT DOWN JUST BEFORE 2:00 AM, BACK ON-LINE BY 3:00 AM MP
* DOWN AGAIN @ 3:50 AM, UP AGAIN @ 4:15 AM

DAILY AIR MONITORING FORM - EXTRACTION

Date : 8-12-2021

DAY SHIFT READINGS

Lead/Supervisor Name: [illegible]

FGEXTRACTION SPARGE DECK TT-31600-32			
Meal Temp. [limit: ≥ 195 °F]			Operator
Time	Status	Temp. °F	Initials
5:00 AM	(ON) / OFF	224	JZC
6:00 AM	(ON) / OFF	224	JZC
7:00 AM	(ON) / OFF	224	JZC
8:00 AM	(ON) / OFF	224	JZC
9:00 AM	(ON) / OFF	224	JZC
10:00 AM	(ON) / OFF	224	JZC
11:00 AM	(ON) / OFF	224	JZC
12:00 PM	(ON) / OFF	224	JZC
1:00 PM	(ON) / OFF	224	JZC
2:00 PM	(ON) / OFF	224	JZC
3:00 PM	(ON) / OFF	224	JZC
4:00 PM	(ON) / OFF	224	JZC

SVEXTRACTION		
% LEL [limit: 50%]		Operator
Time	LEL	Initials
0845	8.99	JZC
1245	9.70	JZC
1537	5.18	JZC

NIGHT SHIFT READINGS

Lead/Supervisor Name: Marcus Mokomb

FGEXTRACTION SPARGE DECK TT-31600-32			
Meal Temp. [limit: ≥ 195 °F]			Operator
Time	Status	Temp. °F	Initials
5:00 PM	(ON) / OFF	225	MP
6:00 PM	(ON) / OFF	224	MP
7:00 PM	(ON) / OFF	224	MP
8:00 PM	(ON) / OFF	224	MP
9:00 PM	(ON) / OFF	224	MP
10:00 PM	(ON) / OFF	224	MP
11:00 PM	(ON) / OFF	224	MP
12:00 AM	(ON) / OFF	224	MP
1:00 AM	(ON) / OFF	224	MP
2:00 AM	(ON) / OFF	225	MP
3:00 AM	(ON) / OFF	224	MP
4:00 AM	(ON) / OFF	225	MP

SVEXTRACTION		
% LEL [limit: 50%]		Operator
Time	LEL	Initials
1714	5.47	MP
2226	7.30	MP
0300	6.17	MP

Comments/Corrective Actions:

DAILY AIR MONITORING FORM - EXTRACTION

Date : 08/13/2021

DAY SHIFT READINGS

Lead/Supervisor Name: [illegible]

FGEXTRACTION SPARGE DECK TT-31600-32			
Meal Temp. [limit: ≥ 195 °F]			Operator
Time	Status	Temp. °F	Initials
5:00 AM	(ON) / OFF	224	BMD
6:00 AM	(ON) / OFF	224	BMD
7:00 AM	(ON) / OFF	224	BMD
8:00 AM	(ON) / OFF	224	BMD
9:00 AM	(ON) / OFF	225	BMD
10:00 AM	(ON) / OFF	224	BMD
11:00 AM	(ON) / OFF	224	BMD
12:00 PM	(ON) / OFF	224	BMD
1:00 PM	(ON) / OFF	224	BMD
2:00 PM	(ON) / OFF	224	BMD
3:00 PM	(ON) / OFF	224	BMD
4:00 PM	(ON) / OFF	224	BMD

SVEXTRACTION		
% LEL [limit: 50%]		Operator
Time	LEL	Initials
0513	6.58	BMD
1025	6.88	BMD
1519	7.30	BMD

NIGHT SHIFT READINGS

Lead/Supervisor Name: [illegible]

FGEXTRACTION SPARGE DECK TT-31600-32			
Meal Temp. [limit: ≥ 195 °F]			Operator
Time	Status	Temp. °F	Initials
5:00 PM	(ON) / OFF	224	BW
6:00 PM	(ON) / OFF	224	BW
7:00 PM	(ON) / OFF	224	BW
8:00 PM	(ON) / OFF	224	BW
9:00 PM	(ON) / OFF	224.9	JF
10:00 PM	(ON) / OFF	224	BW
11:00 PM	(ON) / OFF	224	BW
12:00 AM	(ON) / OFF	224.4	JF
1:00 AM	(ON) / OFF	224	BW
2:00 AM	(ON) / OFF	224	BW
3:00 AM	(ON) / OFF	224	JF
4:00 AM	(ON) / OFF	224	BW

SVEXTRACTION		
% LEL [limit: 50%]		Operator
Time	LEL	Initials
1700	7.14	BW
2300	7.02	BW
0300	6.45	JF

Comments/Corrective Actions:

DAILY AIR MONITORING FORM - EXTRACTION

Date : 08/14/2021

DAY SHIFT READINGS

Lead/Supervisor Name: [illegible]

FGEXTRACTION SPARGE DECK TT-31600-32			
Meal Temp. [limit: ≥ 195 °F]			Operator Initials
Time	Status	Temp. °F	
5:00 AM	(ON) / OFF	224	BMD
6:00 AM	(ON) / OFF	224	BMD
7:00 AM	(ON) / OFF	224	BMD
8:00 AM	(ON) / OFF	224	BMD
9:00 AM	(ON) / OFF	224	BMD
10:00 AM	(ON) / OFF	224	BMD
11:00 AM	(ON) / OFF	224	BMD
12:00 PM	(ON) / OFF	224	BMD
1:00 PM	(ON) / OFF	224	BMD
2:00 PM	(ON) / OFF	224	BMD
3:00 PM	(ON) / OFF	225	BMD
4:00 PM	(ON) / OFF	225	BMD

SVEXTRACTION		
% LEL [limit: 50%]		Operator Initials
Time	LEL	
0529	6.46	BMD
1054	8.01	BMD
1545	8.15	BMD

NIGHT SHIFT READINGS

Lead/Supervisor Name: [illegible]

FGEXTRACTION SPARGE DECK TT-31600-32			
Meal Temp. [limit: ≥ 195 °F]			Operator Initials
Time	Status	Temp. °F	
5:00 PM	(ON) / OFF	225	[illegible]
6:00 PM	(ON) / OFF	225	[illegible]
7:00 PM	(ON) / OFF	225	[illegible]
8:00 PM	(ON) / OFF	225	[illegible]
9:00 PM	(ON) / OFF	225	[illegible]
10:00 PM	(ON) / OFF	225	[illegible]
11:00 PM	(ON) / OFF	225	[illegible]
12:00 AM	(ON) / OFF	225	[illegible]
1:00 AM	(ON) / OFF	225	[illegible]
2:00 AM	(ON) / OFF	225	[illegible]
3:00 AM	(ON) / OFF	225	[illegible]
4:00 AM	(ON) / OFF	225	[illegible]

SVEXTRACTION		
% LEL [limit: 50%]		Operator Initials
Time	LEL	
1730	8.1	[illegible]
2300	7.5	[illegible]
0300	7.0	[illegible]

Comments/Corrective Actions:

DAILY AIR MONITORING FORM - EXTRACTION

Date : 08/15/2021

DAY SHIFT READINGS

Lead/Supervisor Name: [illegible]

FGEXTRACTION SPARGE DECK TT-31600-32			
Meal Temp. [limit: ≥ 195 °F]			Operator
Time	Status	Temp. °F	Initials
5:00 AM	(ON) / OFF	224	BMD
6:00 AM	(ON) / OFF	224	BMD
7:00 AM	(ON) / OFF	224	BMD
8:00 AM	(ON) / OFF	225	BMD
9:00 AM	(ON) / OFF	224	BMD
10:00 AM	(ON) / OFF	224	BMD
11:00 AM	(ON) / OFF	224	BMD
12:00 PM	(ON) / OFF	224	BMD
1:00 PM	(ON) / OFF	225	BMD
2:00 PM	(ON) / OFF	224	BMD
3:00 PM	(ON) / OFF	224	BMD
4:00 PM	(ON) / OFF	225	BMD

SVEXTRACTION		
% LEL [limit: 50%]		Operator
Time	LEL	Initials
0532	7.16	BMD
1004	8.01	BMD
1517	6.74	BMD

NIGHT SHIFT READINGS

Lead/Supervisor Name: [illegible]

FGEXTRACTION SPARGE DECK TT-31600-32			
Meal Temp. [limit: ≥ 195 °F]			Operator
Time	Status	Temp. °F	Initials
5:00 PM	(ON) / OFF	225	JF
6:00 PM	(ON) / OFF	224	JF
7:00 PM	(ON) / OFF	223	JF
8:00 PM	(ON) / OFF	224	JF
9:00 PM	(ON) / OFF	224	JF
10:00 PM	(ON) / OFF	224	[illegible]
11:00 PM	(ON) / OFF	224	[illegible]
12:00 AM	(ON) / OFF	224	JF
1:00 AM	(ON) / OFF	224	[illegible]
2:00 AM	(ON) / OFF	224	JF
3:00 AM	(ON) / OFF	224	JF
4:00 AM	(ON) / OFF	224	JF

SVEXTRACTION		
% LEL [limit: 50%]		Operator
Time	LEL	Initials
1740	5.75	JF
2320	6.04	[illegible]
0300	6.45	JF

Comments/Corrective Actions:

DAILY AIR MONITORING FORM - EXTRACTION

Date : 8-16-2021

DAY SHIFT READINGS

Lead/Supervisor Name: [illegible]

FGEXTRACTION SPARGE DECK TT-31600-32			
Meal Temp. [limit: ≥ 195 °F]			Operator
Time	Status	Temp. °F	Initials
5:00 AM	(ON) / OFF	224	JZC
6:00 AM	(ON) / OFF	224	JZC
7:00 AM	(ON) / OFF	224	JZC
8:00 AM	(ON) / OFF	224	JZC
9:00 AM	(ON) / OFF	225	JZC
10:00 AM	(ON) / OFF	225	JZC
11:00 AM	(ON) / OFF	225	JZC
12:00 PM	(ON) / OFF	224	JZC
1:00 PM	(ON) / OFF	224	JZC
2:00 PM	(ON) / OFF	224	JZC
3:00 PM	(ON) / OFF	224	JZC
4:00 PM	(ON) / OFF	224	JZC

SVEXTRACTION		
% LEL [limit: 50%]		Operator
Time	LEL	Initials
0500	6.17	JZC
1100	6.73	JZC
1600	6.74	JZC

NIGHT SHIFT READINGS

Lead/Supervisor Name: Thomas Holcomb

FGEXTRACTION SPARGE DECK TT-31600-32			
Meal Temp. [limit: ≥ 195 °F]			Operator
Time	Status	Temp. °F	Initials
5:00 PM	(ON) / OFF	224	JM
6:00 PM	(ON) / OFF	224	JM
7:00 PM	(ON) / OFF	226	JM
8:00 PM	(ON) / OFF	~~225~~	~~JM~~ TH
9:00 PM	(ON) / OFF	~~225~~	~~JM~~ TH
10:00 PM	(ON) / OFF	225	JM
11:00 PM	(ON) / OFF	225	JM
12:00 AM	(ON) / OFF	225	JM
1:00 AM	(ON) / OFF	225	JM
2:00 AM	(ON) / OFF	224	JM
3:00 AM	(ON) / OFF	224	JM
4:00 AM	(ON) / OFF	224	JM

SVEXTRACTION		
% LEL [limit: 50%]		Operator
Time	LEL	Initials
1700	6.74	JM
2330	6.72	JM
0415	5.61	JM

Comments/Corrective Actions:

Plant down @ 1030 ; back up @ 1100
operator read wrong time and circled 9pm OFF instead of 10 pm on. I accidentally crossed out 8pm when fixing this 9pm. 8pm was good ON @ 225° - TH

DAILY AIR MONITORING FORM - EXTRACTION

Date : 8-17-21

DAY SHIFT READINGS

Lead/Supervisor Name: [illegible]

FGEXTRACTION SPARGE DECK TT-31600-32			
Meal Temp. [limit: ≥ 195 °F]			Operator
Time	Status	Temp. °F	Initials
5:00 AM	(ON) / OFF	224	JZC
6:00 AM	(ON) / OFF	224	JZC
7:00 AM	(ON) / OFF	224	JZC
8:00 AM	(ON) / OFF	225	JZC
9:00 AM	(ON) / OFF	225	JZC
10:00 AM	(ON) / OFF	226	JZC
11:00 AM	(ON) / OFF	226	JZC
12:00 PM	(ON) / OFF	226	JZC
1:00 PM	(ON) / OFF	226	JZC
2:00 PM	(ON) / OFF	225	JZC
3:00 PM	(ON) / OFF	224	JZC
4:00 PM	(ON) / OFF	224	JZC

SVEXTRACTION		
% LEL [limit: 50%]		Operator
Time	LEL	Initials
0600	5.20	JZC
1100	6.17	JZC
1615	5.62	JZC

NIGHT SHIFT READINGS

Lead/Supervisor Name: Thomas Holcomb

FGEXTRACTION SPARGE DECK TT-31600-32			
Meal Temp. [limit: ≥ 195 °F]			Operator
Time	Status	Temp. °F	Initials
5:00 PM	(ON) / OFF	224	JM
6:00 PM	(ON) / OFF	224	JM
7:00 PM	(ON) / OFF	224	JM
8:00 PM	(ON) / OFF	224	JM
9:00 PM	(ON) / OFF	224	JM
10:00 PM	(ON) / OFF	224	JM
11:00 PM	(ON) / OFF	224	JM
12:00 AM	(ON) / OFF	224	JM
1:00 AM	(ON) / OFF	224	JM
2:00 AM	(ON) / OFF	224	JM
3:00 AM	(ON) / OFF	224	JM
4:00 AM	(ON) / OFF	224	JM

SVEXTRACTION		
% LEL [limit: 50%]		Operator
Time	LEL	Initials
1700	5.90	JM
2230	5.48	JM
0400	5.05	JM

Comments/Corrective Actions:

DAILY AIR MONITORING FORM - EXTRACTION

Date : 08/18/2021

DAY SHIFT READINGS

Lead/Supervisor Name: Jr Isern

FGEXTRACTION SPARGE DECK TT-31600-32			
Meal Temp. [limit: ≥ 195 °F]			Operator
Time	Status	Temp. °F	Initials
5:00 AM	ON / OFF	224	BMD
6:00 AM	ON / OFF	224	BMD
7:00 AM	ON / OFF	224	BMD
8:00 AM	ON / OFF	224	BMD
9:00 AM	ON / OFF	224	BMD
10:00 AM	ON / OFF	224	BMD
11:00 AM	ON / OFF	224	BMD
12:00 PM	ON / OFF	224	BMD
1:00 PM	ON / OFF	224	BMD
2:00 PM	ON / OFF	224	BMD
3:00 PM	ON / OFF	224	BMD
4:00 PM	ON / OFF	224	BMD

SVEXTRACTION		
% LEL [limit: 50%]		Operator
Time	LEL	Initials
0549	5.62	BMD
1015	5.75	BMD
1580	6.04	BMD

NIGHT SHIFT READINGS

Lead/Supervisor Name: Jr Isern

FGEXTRACTION SPARGE DECK TT-31600-32			
Meal Temp. [limit: ≥ 195 °F]			Operator
Time	Status	Temp. °F	Initials
5:00 PM	ON / OFF	224.75	BAW
6:00 PM	ON / OFF	224	BAW
7:00 PM	ON / OFF	224	BAW
8:00 PM	ON / OFF	224	BAW
9:00 PM	ON / OFF	224	BAW
10:00 PM	ON / OFF	224	BAW
11:00 PM	ON / OFF	224	BAW
12:00 AM	ON / OFF	224	BAW
1:00 AM	ON / OFF	224	BAW
2:00 AM	ON / OFF	224	BAW
3:00 AM	ON / OFF	224	BAW
4:00 AM	ON / OFF	224	BAW

SVEXTRACTION		
% LEL [limit: 50%]		Operator
Time	LEL	Initials
1734	6.74	BAW
2200	5.48	BAW
0318	6.46	BAW

Comments/Corrective Actions:

DAILY AIR MONITORING FORM - EXTRACTION

Date : 8-19-21

DAY SHIFT READINGS

Lead/Supervisor Name: Bryan McReynolds

FGEXTRACTION SPARGE DECK TT-31600-32			
Meal Temp. [limit: ≥ 195 °F]			Operator
Time	Status	Temp. °F	Initials
5:00 AM	(ON) / OFF	225	VD
6:00 AM	(ON) / OFF	225	VD
7:00 AM	(ON) / OFF	225	VD
8:00 AM	(ON) / OFF	225	VD
9:00 AM	(ON) / OFF	225	VD
10:00 AM	(ON) / OFF	224	VD
11:00 AM	(ON) / OFF	225	VD
12:00 PM	(ON) / OFF	225	VD
1:00 PM	(ON) / OFF	225	VD
2:00 PM	(ON) / OFF	225	VD
3:00 PM	(ON) / OFF	225	VD
4:00 PM	(ON) / OFF	225	VD

SVEXTRACTION		
% LEL [limit: 50%]		Operator
Time	LEL	Initials
0538	6.04	VD
1032	7.73	VD
1302	6.18	VD

NIGHT SHIFT READINGS

Lead/Supervisor Name: [illegible]

FGEXTRACTION SPARGE DECK TT-31600-32			
Meal Temp. [limit: ≥ 195 °F]			Operator
Time	Status	Temp. °F	Initials
5:00 PM	(ON) / OFF	225	JM
6:00 PM	(ON) / OFF	225	JM
7:00 PM	(ON) / OFF	225	JM
8:00 PM	(ON) / OFF	225	JM
9:00 PM	(ON) / OFF	225	JM
10:00 PM	(ON) / OFF	225	JM
11:00 PM	(ON) / OFF	225	JM
12:00 AM	(ON) / OFF	226	JM
1:00 AM	(ON) / OFF	224	JM
2:00 AM	(ON) / OFF	224	JM
3:00 AM	(ON) / OFF	226	JM
4:00 AM	(ON) / OFF	224	JM

SVEXTRACTION		
% LEL [limit: 50%]		Operator
Time	LEL	Initials
1700	6.74	JM
2300	6.86	JM
0420	8.27	JM

Comments/Corrective Actions:

DAILY AIR MONITORING FORM - EXTRACTION

Date : 8-20-2021

DAY SHIFT READINGS

Lead/Supervisor Name: Seth D

FGEXTRACTION SPARGE DECK TT-31600-32			
Meal Temp. [limit: ≥ 195 °F]			Operator
Time	Status	Temp. °F	Initials
5:00 AM	(ON) / OFF	224	JZC
6:00 AM	(ON) / OFF	225	JZC
7:00 AM	(ON) / OFF	225	JZC
8:00 AM	(ON) / OFF	225	JZC
9:00 AM	(ON) / OFF	225	JZC
10:00 AM	(ON) / OFF	225	JZC
11:00 AM	(ON) / OFF	224	JZC
12:00 PM	(ON) / OFF	224	JZC
1:00 PM	(ON) / OFF	224	JZC
2:00 PM	(ON) / OFF	225	JZC
3:00 PM	(ON) / OFF	225	JZC
4:00 PM	(ON) / OFF	225	JZC

SVEXTRACTION		
% LEL [limit: 50%]		Operator
Time	LEL	Initials
0815	6.15	JZC
1200	7.56	JZC
1600	7.28	JZC

NIGHT SHIFT READINGS

Lead/Supervisor Name: Jon Lee

FGEXTRACTION SPARGE DECK TT-31600-32			
Meal Temp. [limit: ≥ 195 °F]			Operator
Time	Status	Temp. °F	Initials
5:00 PM	(ON) / OFF	225	MP
6:00 PM	(ON) / OFF	225	MP
7:00 PM	(ON) / OFF	225	MP
8:00 PM	(ON) / OFF	225	MP
9:00 PM	(ON) / OFF	225	MP
10:00 PM	(ON) / OFF	225	MP
11:00 PM	(ON) / OFF	225	MP
12:00 AM	(ON) / OFF	225	MP
1:00 AM	(ON) / OFF	225	MP
2:00 AM	(ON) / OFF	225	MP
3:00 AM	(ON) / OFF	225	MP
4:00 AM	(ON) / OFF	225	MP

SVEXTRACTION		
% LEL [limit: 50%]		Operator
Time	LEL	Initials
1712	6.43	MP
2231	5.75	MP
0304	6.02	MP

Comments/Corrective Actions:

DAILY AIR MONITORING FORM - EXTRACTION

Date : 8-21-2021

DAY SHIFT READINGS

Lead/Supervisor Name: [illegible]

FGEXTRACTION SPARGE DECK TT-31600-32			
Meal Temp. [limit: ≥ 195 °F]			Operator Initials
Time	Status	Temp. °F	
5:00 AM	ON / OFF	224	JZC
6:00 AM	ON / OFF	224	JZC
7:00 AM	ON / OFF	224	JZC
8:00 AM	ON / OFF	224	JZC
9:00 AM	ON / OFF	224	JZC
10:00 AM	ON / OFF	224	JZC
11:00 AM	ON / OFF	224	JZC
12:00 PM	ON / OFF	224 224	JZC
1:00 PM	ON / OFF	224 [illegible]	JZC
2:00 PM	ON / OFF	225	SB
3:00 PM	ON / OFF	225	JS
4:00 PM	ON / OFF	225	JS

SVEXTRACTION		
% LEL [limit: 50%]		Operator Initials
Time	LEL	
0500	6.29	JZC
0900	7.70	JZC
1500	7.0	JS

NIGHT SHIFT READINGS

Lead/Supervisor Name: Thomas Holcomb

FGEXTRACTION SPARGE DECK TT-31600-32			
Meal Temp. [limit: ≥ 195 °F]			Operator Initials
Time	Status	Temp. °F	
5:00 PM	ON / OFF	225	JS
6:00 PM	ON / OFF	225	JS
7:00 PM	ON / OFF	225	JS
8:00 PM	ON / OFF	225	JS
9:00 PM	ON / OFF	225	JS
10:00 PM	ON / OFF	225	JS
11:00 PM	ON / OFF	225	JS
12:00 AM	ON / OFF	225	JS
1:00 AM	ON / OFF	225	JS
2:00 AM	ON / OFF	225	JS
3:00 AM	ON / OFF	225	JS
4:00 AM	ON / OFF	225	TM

SVEXTRACTION		
% LEL [limit: 50%]		Operator Initials
Time	LEL	
1700	7.28	JS
2200	6.71	JS
0345	6.44	TM

Comments/Corrective Actions:

DAILY AIR MONITORING FORM - EXTRACTION

Date : 8-22-21

DAY SHIFT READINGS

Lead/Supervisor Name: [illegible]

FGEXTRACTION SPARGE DECK TT-31600-32			
Meal Temp. [limit: ≥ 195 °F]			Operator
Time	Status	Temp. °F	Initials
5:00 AM	(ON) / OFF	225	JZC
6:00 AM	(ON) / OFF	224	JZC
7:00 AM	(ON) / OFF	224	JZC
8:00 AM	(ON) / OFF	224	JZC
9:00 AM	(ON) / OFF	224	JZC
10:00 AM	(ON) / OFF	224	JZC
11:00 AM	(ON) / OFF	224	JZC
12:00 PM	(ON) / OFF	224	JZC
1:00 PM	(ON) / OFF	224	JZC
2:00 PM	(ON) / OFF	224	JZC
3:00 PM	(ON) / OFF	225	JZC
4:00 PM	(ON) / OFF	225	JZC

SVEXTRACTION		
% LEL [limit: 50%]		Operator
Time	LEL	Initials
0500	6.43	JZC
1130	6.99	JZC
1600	7.28	JZC

NIGHT SHIFT READINGS

Lead/Supervisor Name: [illegible]

FGEXTRACTION SPARGE DECK TT-31600-32			
Meal Temp. [limit: ≥ 195 °F]			Operator
Time	Status	Temp. °F	Initials
5:00 PM	(ON) / OFF	224	JM
6:00 PM	(ON) / OFF	224	JM
7:00 PM	(ON) / OFF	224	JM
8:00 PM	(ON) / OFF	224	JM
9:00 PM	(ON) / OFF	225	JM
10:00 PM	(ON) / OFF	224	JM
11:00 PM	(ON) / OFF	224	JM
12:00 AM	(ON) / OFF	224	JM
1:00 AM	(ON) / OFF	224	JM
2:00 AM	(ON) / OFF	224	JM
3:00 AM	(ON) / OFF	224	JM
4:00 AM	(ON) / OFF	224	JM

SVEXTRACTION		
% LEL [limit: 50%]		Operator
Time	LEL	Initials
1712	7.00	JM
2300	6.01	JM
0330	6.68	JM

Comments/Corrective Actions:

DAILY AIR MONITORING FORM - EXTRACTION

Date : 08/23/2021

DAY SHIFT READINGS

Lead/Supervisor Name: Joseph Heaver

FGEXTRACTION SPARGE DECK TT-31600-32			
Meal Temp. [limit: ≥ 195 °F]			Operator
Time	Status	Temp. °F	Initials
5:00 AM	(ON) / OFF	225	BMO
6:00 AM	(ON) / OFF	224	BMO
7:00 AM	(ON) / OFF	224	BMO
8:00 AM	(ON) / OFF	224	BMO
9:00 AM	(ON) / OFF	224	BMO
10:00 AM	(ON) / OFF	224	BMO
11:00 AM	(ON) / OFF	225	BMO
12:00 PM	(ON) / OFF	224	BMO
1:00 PM	(ON) / OFF	225	BMO
2:00 PM	(ON) / OFF	225	BMO
3:00 PM	(ON) / OFF	224	BMO
4:00 PM	(ON) / OFF	225	BMO

SVEXTRACTION		
% LEL [limit: 50%]		Operator
Time	LEL	Initials
0510	6.15	BMO
1014	8.41	BMO
1627	8.13	BMO

NIGHT SHIFT READINGS

Lead/Supervisor Name: Joseph Heaver

FGEXTRACTION SPARGE DECK TT-31600-32			
Meal Temp. [limit: ≥ 195 °F]			Operator
Time	Status	Temp. °F	Initials
5:00 PM	(ON) / OFF	225	JF
6:00 PM	(ON) / OFF	225	JF
7:00 PM	(ON) / OFF	225	JF
8:00 PM	(ON) / OFF	225	JF
9:00 PM	(ON) / OFF	225	JF
10:00 PM	(ON) / OFF	225	JF
11:00 PM	(ON) / OFF	JF ~~222~~ 224	JF
12:00 AM	(ON) / OFF	225	JF
1:00 AM	(ON) / OFF	224	JF
2:00 AM	(ON) / OFF	JF ~~222~~ 224	JF
3:00 AM	(ON) / OFF	224	JF
4:00 AM	(ON) / OFF	224	JF

SVEXTRACTION		
% LEL [limit: 50%]		Operator
Time	LEL	Initials
1711	7.71	JLF
2335	6.69	JLF
0200	6.15	JLF

Comments/Corrective Actions:

DAILY AIR MONITORING FORM - EXTRACTION

Date : 08.24.21

DAY SHIFT READINGS

Lead/Supervisor Name: [illegible]

FGEXTRACTION SPARGE DECK TT-31600-32			
Meal Temp. [limit: ≥ 195 °F]			Operator
Time	Status	Temp. °F	Initials
5:00 AM	(ON) / OFF	224	BMO
6:00 AM	(ON) / OFF	224	BMO
7:00 AM	(ON) / OFF	224	BMO
8:00 AM	(ON) / OFF	224	BMO
9:00 AM	(ON) / OFF	224	BMO
10:00 AM	(ON) / OFF	224	BMO
11:00 AM	(ON) / OFF	224	BMO
12:00 PM	(ON) / OFF	225	BMO
1:00 PM	(ON) / OFF	224	BMO
2:00 PM	(ON) / OFF	224	BMO
3:00 PM	(ON) / OFF	224	BMO
4:00 PM	(ON) / OFF	225	BMO

SVEXTRACTION		
% LEL [limit: 50%]		Operator
Time	LEL	Initials
0517	7.14	BMO
1006	7.71	BMO
1511	8.84	BMO

NIGHT SHIFT READINGS

Lead/Supervisor Name: [illegible]

FGEXTRACTION SPARGE DECK TT-31600-32			
Meal Temp. [limit: ≥ 195 °F]			Operator
Time	Status	Temp. °F	Initials
5:00 PM	(ON) / OFF	224.90	BAW
6:00 PM	(ON) / OFF	225.07	BAW
7:00 PM	(ON) / OFF	225.11	BAW
8:00 PM	(ON) / OFF	224.52	BAW
9:00 PM	(ON) / OFF	224.31	BAW
10:00 PM	(ON) / OFF	225.15	BAW
11:00 PM	(ON) / OFF	224.78	BAW
12:00 AM	(ON) / OFF	224.38	BAW
1:00 AM	(ON) / OFF	224.77	BAW
2:00 AM	ON / OFF	224.81	BAW
3:00 AM	ON / OFF	224.84	BAW
4:00 AM	ON / OFF	224.71	BAW

SVEXTRACTION		
% LEL [limit: 50%]		Operator
Time	LEL	Initials
1711	7.99	BAW
2200	6.43	BAW
0300	7.28	BAW

Comments/Corrective Actions:

DAILY AIR MONITORING FORM - EXTRACTION

Date : 8-25-2021

DAY SHIFT READINGS

Lead/Supervisor Name: [illegible]

FGEXTRACTION SPARGE DECK TT-31600-32			
Meal Temp. [limit: ≥ 195 °F]			Operator
Time	Status	Temp. °F	Initials
5:00 AM	(ON) / OFF	225	JZC
6:00 AM	(ON) / OFF	225	JZC
7:00 AM	(ON) / OFF	225	JZC
8:00 AM	(ON) / OFF	225	JZC
9:00 AM	(ON) / OFF	225	JZC
10:00 AM	(ON) / OFF	225	JZC
11:00 AM	(ON) / OFF	225	JZC
12:00 PM	(ON) / OFF	225	JZC
1:00 PM	(ON) / OFF	225	JZC
2:00 PM	(ON) / OFF	225	JZC
3:00 PM	(ON) / OFF	225	SB
4:00 PM	(ON) / OFF	225	SB

SVEXTRACTION		
% LEL [limit: 50%]		Operator
Time	LEL	Initials
0545	7.71	JZC
1300	7.70	JZC
1500	7.69	SB

NIGHT SHIFT READINGS

Lead/Supervisor Name: Thomas Holcomb

FGEXTRACTION SPARGE DECK TT-31600-32			
Meal Temp. [limit: ≥ 195 °F]			Operator
Time	Status	Temp. °F	Initials
5:00 PM	(ON) / OFF	225	JS
6:00 PM	(ON) / OFF	225	JS
7:00 PM	(ON) / OFF	225	JS
8:00 PM	(ON) / OFF	225	JS
9:00 PM	(ON) / OFF	224	JS
10:00 PM	(ON) / OFF	225	JS
11:00 PM	(ON) / OFF	225	JS
12:00 AM	(ON) / OFF	225	JS
1:00 AM	(ON) / OFF	225	JS
2:00 AM	(ON) / OFF	224	JS
3:00 AM	(ON) / OFF	225	JS
4:00 AM	(ON) / OFF	225	JS

SVEXTRACTION		
% LEL [limit: 50%]		Operator
Time	LEL	Initials
1700	7.56	JS
2100	7.28	JS
0300	7.54	JS

Comments/Corrective Actions:

DAILY AIR MONITORING FORM - EXTRACTION

Date : 8-26-21

DAY SHIFT READINGS

Lead/Supervisor Name: [illegible]

FGEXTRACTION SPARGE DECK TT-31600-32			
Meal Temp. [limit: ≥ 195 °F]			Operator
Time	Status	Temp. °F	Initials
5:00 AM	ON / OFF	224	JZC
6:00 AM	ON / OFF	224	JZC
7:00 AM	ON / OFF	224	JZC
8:00 AM	ON / OFF	224	JZC
9:00 AM	ON / OFF	224	JZC
10:00 AM	ON / OFF	224	JZC
11:00 AM	ON / OFF	224	JZC
12:00 PM	ON / OFF	224	JZC
1:00 PM	ON / OFF	224	JZC
2:00 PM	ON / OFF	225	JZC
3:00 PM	ON / OFF	225	JZC
4:00 PM	ON / OFF	225	JZC

SVEXTRACTION		
% LEL [limit: 50%]		Operator
Time	LEL	Initials
0530	6.43	JZC
1300	7.28	JZC
1600	7.00	JZC

NIGHT SHIFT READINGS

Lead/Supervisor Name: Thomas Molegomb

FGEXTRACTION SPARGE DECK TT-31600-32			
Meal Temp. [limit: ≥ 195 °F]			Operator
Time	Status	Temp. °F	Initials
5:00 PM	ON / OFF	225	JM
6:00 PM	ON / OFF	224	JM
7:00 PM	ON / OFF	224	JM
8:00 PM	ON / OFF	225	JM
9:00 PM	ON / OFF	224	JM
10:00 PM	ON / OFF	224	JM
11:00 PM	ON / OFF	224	JM
12:00 AM	ON / OFF	224	JM
1:00 AM	ON / OFF	225	JM
2:00 AM	ON / OFF	225	JM
3:00 AM	ON / OFF	225	JM
4:00 AM	ON / OFF	224	JM

SVEXTRACTION		
% LEL [limit: 50%]		Operator
Time	LEL	Initials
1725	7.43	JM
2300	6.16	JM
0330	6.71	JM

Comments/Corrective Actions:

DAILY AIR MONITORING FORM - EXTRACTION

Date : 08/27/2021

DAY SHIFT READINGS

Lead/Supervisor Name: [signature]

FGEXTRACTION SPARGE DECK TT-31600-32			
Meal Temp. [limit: ≥ 195 °F]			Operator
Time	Status	Temp. °F	Initials
5:00 AM	(ON) / OFF	225	BMO
6:00 AM	(ON) / OFF	224	BMO
7:00 AM	(ON) / OFF	224	BMO
8:00 AM	(ON) / OFF	224	BMO
9:00 AM	(ON) / OFF	224	BMO
10:00 AM	(ON) / OFF	225	BMO
11:00 AM	(ON) / OFF	225	BMO
12:00 PM	(ON) / OFF	224	BMO
1:00 PM	(ON) / OFF	224	BMO
2:00 PM	(ON) / OFF	225	BMO
3:00 PM	(ON) / OFF	224	BMO
4:00 PM	(ON) / OFF	224	BMO

SVEXTRACTION		
% LEL [limit: 50%]		Operator
Time	LEL	Initials
0522	6.58	BMO
1008	7.56	BMO
1402	8.55	BMO

NIGHT SHIFT READINGS

Lead/Supervisor Name: [signature]

FGEXTRACTION SPARGE DECK TT-31600-32			
Meal Temp. [limit: ≥ 195 °F]			Operator
Time	Status	Temp. °F	Initials
5:00 PM	(ON) / OFF	224	JLF
6:00 PM	(ON) / OFF	224	JLF
7:00 PM	(ON) / OFF	224	JLF
8:00 PM	(ON) / OFF	224	JLF
9:00 PM	(ON) / OFF	224	JLF
10:00 PM	(ON) / OFF	224	JLF
11:00 PM	(ON) / OFF	224	JLF
12:00 AM	(ON) / OFF	225	JLF
1:00 AM	(ON) / OFF	225	JLF
2:00 AM	(ON) / OFF	224	JLF
3:00 AM	(ON) / OFF	224	JLF
4:00 AM	(ON) / OFF	224	JLF

SVEXTRACTION		
% LEL [limit: 50%]		Operator
Time	LEL	Initials
1713	9.26	JLF
2303	6.30	JLF
0205	6.72	JLF

Comments/Corrective Actions:

DAILY AIR MONITORING FORM - EXTRACTION

Date : 08/28/2021

DAY SHIFT READINGS

Lead/Supervisor Name: [signature]

FGEXTRACTION SPARGE DECK TT-31600-32			
Meal Temp. [limit: ≥ 195 °F]			Operator
Time	Status	Temp. °F	Initials
5:00 AM	(ON) / OFF	225	BMO
6:00 AM	(ON) / OFF	224	BMO
7:00 AM	(ON) / OFF	224	BMO
8:00 AM	(ON) / OFF	224	BMO
9:00 AM	(ON) / OFF	225	BMO
10:00 AM	(ON) / OFF	225	BMO
11:00 AM	(ON) / OFF	224	BMO
12:00 PM	(ON) / OFF	225	BMO
1:00 PM	(ON) / OFF	224	BMO
2:00 PM	(ON) / OFF	226	BMO
3:00 PM	(ON) / OFF	225	BMO
4:00 PM	(ON) / OFF	225	BMO

SVEXTRACTION		
% LEL [limit: 50%]		Operator
Time	LEL	Initials
0527	7.71	BMO
1027	8.27	BMO
1524	8.55	BMO

NIGHT SHIFT READINGS

Lead/Supervisor Name: [signature]

FGEXTRACTION SPARGE DECK TT-31600-32			
Meal Temp. [limit: ≥ 195 °F]			Operator
Time	Status	Temp. °F	Initials
5:00 PM	(ON) / OFF	224	JLF
6:00 PM	(ON) / OFF	224	JLF
7:00 PM	(ON) / OFF	224.84	BAW
8:00 PM	(ON) / OFF	224.87	BAW
9:00 PM	(ON) / OFF	224.91	BAW
10:00 PM	(ON) / OFF	225.06	BAW
11:00 PM	(ON) / OFF	224.96	BAW
12:00 AM	(ON) / OFF	225.18	BAW
1:00 AM	(ON) / OFF	225.19	BAW
2:00 AM	(ON) / OFF	225.07	BAW
3:00 AM	(ON) / OFF	225.11	BAW
4:00 AM	(ON) / OFF	225.05	BAW

SVEXTRACTION		
% LEL [limit: 50%]		Operator
Time	LEL	Initials
1829	7.99	JLF
2000	7.70	BAW
0300	7.56	BAW

Comments/Corrective Actions:

DAILY AIR MONITORING FORM - EXTRACTION

Date : 08-29-21

DAY SHIFT READINGS

Lead/Supervisor Name: [signature]

FGEXTRACTION SPARGE DECK TT-31600-32			
Meal Temp. [limit: ≥ 195 °F]			Operator
Time	Status	Temp. °F	Initials
5:00 AM	ON / OFF	225	VD
6:00 AM	ON / OFF	225	VD
7:00 AM	ON / OFF	224	VD
8:00 AM	ON / OFF	225	VD
9:00 AM	ON / OFF	225	VD
10:00 AM	ON / OFF	224	VD
11:00 AM	ON / OFF	224	VD
12:00 PM	ON / OFF	224	VD
1:00 PM	ON / OFF	224	VD
2:00 PM	ON / OFF	225	VD
3:00 PM	ON / OFF	224	VD
4:00 PM	ON / OFF	224	VD

SVEXTRACTION		
% LEL [limit: 50%]		Operator
Time	LEL	Initials
0553	7.56	VD
1002	8.69	VD
1526	7.14	VD

NIGHT SHIFT READINGS

Lead/Supervisor Name: [signature]

FGEXTRACTION SPARGE DECK TT-31600-32			
Meal Temp. [limit: ≥ 195 °F]			Operator
Time	Status	Temp. °F	Initials
5:00 PM	ON / OFF	224	JLF
6:00 PM	ON / OFF	224	JLF
7:00 PM	ON / OFF	224	JLF
8:00 PM	ON / OFF	224	JLF
9:00 PM	ON / OFF	224	JLF
10:00 PM	ON / OFF	224	JLF
11:00 PM	ON / OFF	224	JLF
12:00 AM	ON / OFF	225	JLF
1:00 AM	ON / OFF	225	JLF
2:00 AM	ON / OFF	224	JLF
3:00 AM	ON / OFF	224	JLF
4:00 AM	ON / OFF	224	JLF

SVEXTRACTION		
% LEL [limit: 50%]		Operator
Time	LEL	Initials
1905	7.15	JLF
2345	7.42	JLF
0236	7.42	JLF

Comments/Corrective Actions:

DAILY AIR MONITORING FORM - EXTRACTION

Date : 8·30·21

DAY SHIFT READINGS

Lead/Supervisor Name: Seth B

FGEXTRACTION SPARGE DECK TT-31600-32			
Meal Temp. [limit: ≥ 195 °F]			Operator
Time	Status	Temp. °F	Initials
5:00 AM	(ON) / OFF	225	JJ
6:00 AM	(ON) / OFF	225	JJ
7:00 AM	(ON) / OFF	225	JJ
8:00 AM	(ON) / OFF	225	JJ
9:00 AM	(ON) / OFF	225	JJ
10:00 AM	(ON) / OFF	224	JJ
11:00 AM	(ON) / OFF	224	JJ
12:00 PM	(ON) / OFF	225	JJ
1:00 PM	(ON) / OFF	224	JJ
2:00 PM	(ON) / OFF	225	JJ
3:00 PM	(ON) / OFF	224	JJ
4:00 PM	(ON) / OFF	225	JJ

SVEXTRACTION		
% LEL [limit: 50%]		Operator
Time	LEL	Initials
0533	7	JJ
1225	7.28	JJ
1457	8.27	JJ

NIGHT SHIFT READINGS

Lead/Supervisor Name:

FGEXTRACTION SPARGE DECK TT-31600-32			
Meal Temp. [limit: ≥ 195 °F]			Operator
Time	Status	Temp. °F	Initials
5:00 PM	(ON) / OFF	225	JWS
6:00 PM	(ON) / OFF	225	JWS
7:00 PM	(ON) / OFF	225	JWS
8:00 PM	(ON) / OFF	225	JWS
9:00 PM	(ON) / OFF	225	JWS
10:00 PM	(ON) / OFF	225	JWS
11:00 PM	(ON) / OFF	225	JWS
12:00 AM	(ON) / OFF	225	JWS
1:00 AM	(ON) / OFF	225	JWS
2:00 AM	(ON) / OFF	225	JWS
3:00 AM	(ON) / OFF	225	JWS
4:00 AM	(ON) / OFF	225	JWS

SVEXTRACTION		
% LEL [limit: 50%]		Operator
Time	LEL	Initials
1700	8.26	JWS
2300	6.71	JWS
0300	8.68	JWS

Comments/Corrective Actions:

DAILY AIR MONITORING FORM - EXTRACTION

Date : 8-31-2024

DAY SHIFT READINGS

Lead/Supervisor Name: [illegible]

FGEXTRACTION SPARGE DECK TT-31600-32			
Meal Temp. [limit: ≥ 195 °F]			Operator
Time	Status	Temp. °F	Initials
5:00 AM	(ON) / OFF	224	JZC
6:00 AM	(ON) / OFF	224	JZC
7:00 AM	(ON) / OFF	224	JZC
8:00 AM	(ON) / OFF	224	JZC
9:00 AM	(ON) / OFF	224	JZC
10:00 AM	(ON) / OFF	224	JZC
11:00 AM	(ON) / OFF	224	JZC
12:00 PM	(ON) / OFF	224	JZC
1:00 PM	(ON) / OFF	224	JZC
2:00 PM	(ON) / OFF	224	JZC
3:00 PM	(ON) / OFF	224	JZC
4:00 PM	(ON) / OFF	224	JZC

SVEXTRACTION		
% LEL [limit: 50%]		Operator
Time	LEL	Initials
0600	7.55	JZC
1200	7.56	JZC
1600	8.46	JZC

NIGHT SHIFT READINGS

Lead/Supervisor Name: [illegible]

FGEXTRACTION SPARGE DECK TT-31600-32			
Meal Temp. [limit: ≥ 195 °F]			Operator
Time	Status	Temp. °F	Initials
5:00 PM	(ON) / OFF	224	JM
6:00 PM	(ON) / OFF	224	JM
7:00 PM	(ON) / OFF	224	JM
8:00 PM	(ON) / OFF	224	JM
9:00 PM	(ON) / OFF	224	JM
10:00 PM	(ON) / OFF	224	JM
11:00 PM	(ON) / OFF	224	JM
12:00 AM	(ON) / OFF	224	JM
1:00 AM	(ON) / OFF	224	JM
2:00 AM	(ON) / OFF	224	JM
3:00 AM	(ON) / OFF	225	JM
4:00 AM	(ON) / OFF	225	JM

SVEXTRACTION		
% LEL [limit: 50%]		Operator
Time	LEL	Initials
1700	6.28	JM
2230	7.97	JM
0415	8.12	JM

Comments/Corrective Actions:

EUBOILERS Natural Gas Usage

Month	Natural Gas Usage (MMCF)			
	EUBOILER1		EUBOILER2	
	Monthly	12-Month rolling	Monthly	12-Month rolling
Jul-2021	27.64	364.32	28.35	397.87
Aug-2021	30.84	365.24	32.08	399.83
Sep-2021	27.21	367.42	27.74	403.00
Oct-2021	34.67	368.45	38.19	405.69
Nov-2021	33.68	369.30	41.51	402.17
Dec-2021	34.71	370.80	41.41	406.33
Jan-2022	37.21	373.16	43.45	410.52
Feb-2022	34.00	375.71	40.08	417.52
Mar-2022	32.53	376.85	38.39	423.81
Apr-2022	26.05	376.43	33.15	427.22
May-2022	34.01	378.99	38.33	430.34
Jun-2022	31.44	383.99	36.10	438.77

Below are the firing ratings for the two boilers as identified on the label attached to the boilers.

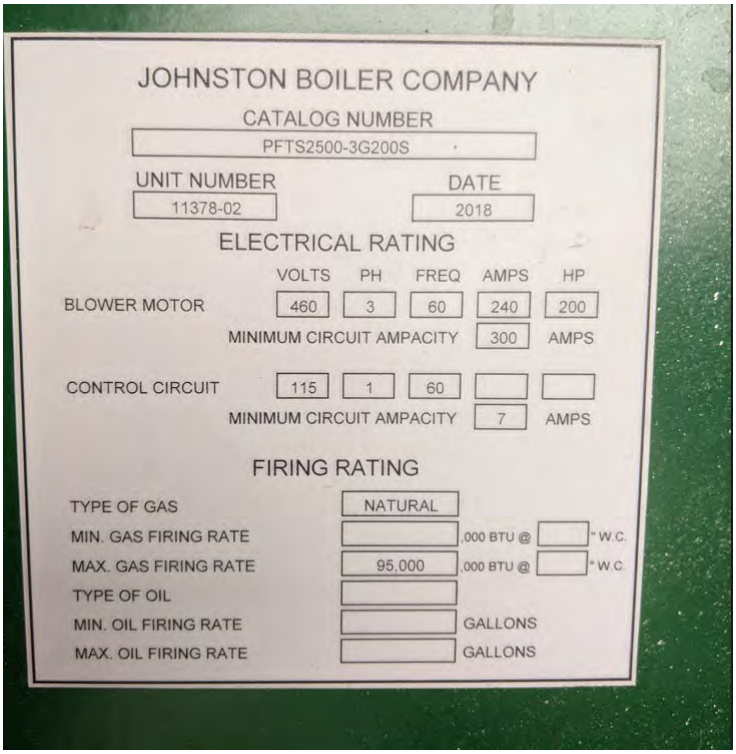

JOHNSTON BOILER COMPANY

CATALOG NUMBER: PFTS2500-3G200S

UNIT NUMBER: 11378-02

DATE: 2018

ELECTRICAL RATING

	VOLTS	PH	FREQ	AMPS	HP
BLOWER MOTOR	460	3	60	240	200
MINIMUM CIRCUIT AMPACITY				300	AMPS
CONTROL CIRCUIT	115	1	60		
MINIMUM CIRCUIT AMPACITY				7	AMPS

FIRING RATING

TYPE OF GAS	NATURAL	
MIN. GAS FIRING RATE	,000 BTU @	" W.C.
MAX. GAS FIRING RATE	95,000 ,000 BTU @	" W.C.
TYPE OF OIL		
MIN. OIL FIRING RATE	GALLONS	
MAX. OIL FIRING RATE	GALLONS	

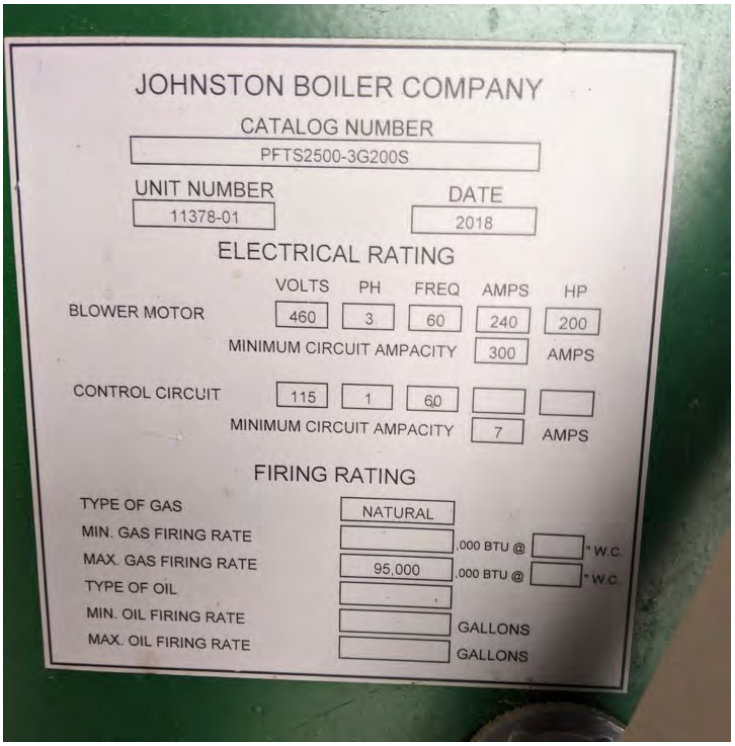

JOHNSTON BOILER COMPANY

CATALOG NUMBER: PFTS2500-3G200S

UNIT NUMBER: 11378-01

DATE: 2018

ELECTRICAL RATING

	VOLTS	PH	FREQ	AMPS	HP
BLOWER MOTOR	460	3	60	240	200
MINIMUM CIRCUIT AMPACITY				300	AMPS
CONTROL CIRCUIT	115	1	60		
MINIMUM CIRCUIT AMPACITY				7	AMPS

FIRING RATING

TYPE OF GAS	NATURAL	
MIN. GAS FIRING RATE	,000 BTU @	" W.C.
MAX. GAS FIRING RATE	95,000 ,000 BTU @	" W.C.
TYPE OF OIL		
MIN. OIL FIRING RATE	GALLONS	
MAX. OIL FIRING RATE	GALLONS	

Monthly Soybeans Processed by FGEXTRACTION		
Month	Monthly Soybeans Processed (Tons)	12-Month Rolling Total Soybeans Processed (Tons)
Jun-2020	103,586	396,167
Jul-2020	97,263	493,430
Aug-2020	101,253	594,683
Sep-2020	80,810	675,494
Oct-2020	109,289	784,782
Nov-2020	110,675	895,458
Dec-2020	106,106	1,001,564
Jan-2021	108,193	1,109,757
Feb-2021	87,981	1,163,382
Mar-2021	93,034	1,191,966
Apr-2021	85,220	1,191,468
May-2021	108,708	1,192,118
Jun-2021	91,323	1,179,854
Jul-2021	92,214	1,174,805
Aug-2021	107,124	1,180,676
Sep-2021	91,050	1,190,916
Oct-2021	115,333	1,196,960
Nov-2021	108,099	1,194,384
Dec-2021	107,020	1,195,297
Jan-2022	111,915	1,199,019
Feb-2022	104,537	1,215,575
Mar-2022	102,367	1,224,908
Apr-2022	89,080	1,228,769
May-2022	114,500	1,234,561
Jun-2022	114,690	1,257,928

Date	Solvent Loss/Soybeans Processed			Weighted Average Volume Fraction HAP	
	Monthly (gal/ton)	3-Month (gal/ton)	12-Month (gal/ton)	Actual Solvent Loss (gal)	HAP %
Aug-2020	0.13	0.12		13,100.00	47.39%
Sep-2020	0.17	0.14		13,518.00	47.10%
Oct-2020	0.09	0.13		10,180.00	54.86%
Nov-2020	0.10	0.12		10,901.00	62.45%
Dec-2020	0.13	0.11		13,348.00	57.65%
Jan-2021	0.13	0.12	0.121	14,407.00	52.40%
Feb-2021	0.12	0.13	0.119	10,175.00	56.91%
Mar-2021	0.13	0.13	0.117	12,081.00	56.80%
Apr-2021	0.08	0.11	0.115	6,918.00	56.80%
May-2021	0.09	0.10	0.114	9,386.00	56.75%
Jun-2021	0.09	0.09	0.115	8,607.00	56.75%
Jul-2021	0.10	0.09	0.113	9,574.00	58.38%
Aug-2021	0.08	0.09	0.108	8,643.15	58.38%
Sep-2021	0.11	0.10	0.105	10,360.15	48.92%
Oct-2021	0.09	0.09	0.104	10,522.49	53.66%
Nov-2021	0.12	0.11	0.106	12,617.54	48.92%
Dec-2021	0.14	0.11	0.107	14,628.88	56.06%
Jan-2022	0.11	0.12	0.105	12,492.35	48.28%
Feb-2022	0.12	0.12	0.106	13,011.95	45.79%
Mar-2022	0.12	0.12	0.106	12,750.35	46.23%
Apr-2022	0.13	0.13	0.110	11,970.22	46.14%
May-2022	0.11	0.12	0.111	12,439.81	47.28%
Jun-2022	0.13	0.12	0.115	15,290.12	47.28%

FGBOILERMACT

Annual Tune-Up Reports

The tune ups for the boilers were last completed in September 2020. The tune up reports are attached. Per 40 CFR 63.7540(a)(12), because the boilers are each equipped with a continuous oxygen trim system, the tune-up requirement is every five (5) years.

Boiler MACT (40 CFR Subpart DDDDD) Tune-up Checklist

Date: 9/24/2020

Company: DEAN BOILER

Facility Name: ZFS ITHACA, MI

Boiler/Process Heater Description: 2018 - JOHNSTON BOILER A L.H.

Boiler/Process Heater Emission Unit ID (based on list ID):

Tune-Up Conducted By: DEAN BOILER

Hand Held Analyzer Type/Model #: TESTO 331

Last Calibration Date of Analyzer: 7/2020

Requirement		Description	Inspector Comments/ Corrective Actions Taken[d] Burner #1	Inspector Comments/ Corrective Actions Taken[d] Burner #2 (if applicable)
☒	Inspect the burner[b]	Clean or replace any components of the burner, as necessary	ALL SATISFACTORY REFRACTORY - GOOD	N/A
☒	Inspect the flame pattern	Adjust the burner as necessary to optimize the flame pattern. The adjustment should be consistent with the manufacturer's specifications, if available.	GOOD PATTERN	N/A
☒	Inspect air-to-fuel ratio control system[b]	Ensure system is calibrated and functioning properly, if such a system is installed on the boiler/process heater	FIREYE NEXUS	N/A
☒	Optimize emissions of carbon monoxide (CO)	Optimize emissions consistent with the manufacturer's specifications, if available, and with any nitrogen oxide requirement to which the boiler/process heater is subject.		N/A

☒	Measure CO and O2 levels in exhaust, before and after tune-up[c]	LOW 6.4% O2 373°F 20 CO MID 5.4% O2 356°F 0 CO HIGH 4.0% O2 347°F 0 - CO SATISFACTORY	Parameter	Before	After	Parameter	Before	After
			Basis (wet or dry)			Basis (wet or dry)		
			CO (ppmv)			CO (ppmv)		
			O2 (% by volume)			O2 (% by volume)		
			Comments[d]			Comments[d]		

6/16/2015

b You may delay the inspection until the next scheduled unit shut down, but you must inspect each burner at least once every 36 months if subject to biennial tune-ups, and at least once every 72 months if subject to 5-year tune-ups.

c Measurements may be made on either a dry or wet basis, as long as it is the same basis before and after the tune-up adjustments are made. CO concentration measurements must be made in units of parts per million by volume (ppmv). Oxygen (O2) concentration measurements must be made as percent by volume. Measurements may be taken using a portable analyzer.

d Fill this form in completely with comments where noted. Additional comments can be detailed below, as necessary.

ADDITIONAL COMMENTS:

Additional Guidance

What if manufacturer's specifications are not available?

The appropriate range within which to manage excess oxygen depends on the fuel type and the method of monitoring and controlling flue gas oxygen content. The following table provides some general information of the typical control limits for steam boilers. The data represented in this table indicates the *expected* operating range for boilers.

The numerical values in the table represent the amount of oxygen (O2) in the flue gas as it exits the combustion zone. This is the actual field measurement for most boilers and it is the common control parameter. The oxygen concentrations noted in the table are "wet basis" measurements and "dry basis" measurement). The rule [§63.11223(b)(5)]) allows measurements on either a dry or wet basis as long as it is the same before and after the adjustments are made.

The two designations in the table are *automatic control* and *positioning control*. *Positioning control* is generally not equipped with continuous flue gas oxygen measurement. The more efficient control is *automatic control*. *Automatic control* (or *continuous automatic control*) continually monitors oxygen content and combustion air flow is trimmed to maintain required oxygen limits, sometimes referred to as *oxygen trim control*.

Typical Flue Gas Oxygen Content Control Parameters								
Fuel	Automatic Control Flue Gas O_2 Content				Positioning Control Flue Gas O_2 Content			
	Minimum		Maximum		Minimum		Maximum	
	Wet Gas Sample [%]	Dry Gas Sample [%]	Wet Gas Sample [%]	Dry Gas Sample [%]	Wet Gas Sample [%]	Dry Gas Sample [%]	Wet Gas Sample [%]	Dry Gas Sample [%]
Natural Gas	1.5	1.8	3.0	3.6	3.0	3.6	7.0	8.0

Wet vs. Dry Basis Gas Sample

The measurement distinction of dry versus wet is based in the manner in which the water-vapor in the sample is managed. A wet based oxygen concentration identifies the amount of oxygen with respect to all of the other flue gas constituents. A dry based oxygen concentration measures the oxygen content of the flue gas sample after the water-vapor has been condensed and removed from the sample. This measurement distinction is important for many reasons and it is critical to note that different instruments provide measurements with one or the other of these bases.

Boiler MACT (40 CFR Subpart DDDDD) Tune-up Checklist

Date: 9/24/2020

Company: DEAN BOILER

Facility Name: ZFS ITHACA, MI

Boiler/Process Heater Description: 2018 – JOHNSTON BOILER B R.H.

Boiler/Process Heater Emission Unit ID (based on list ID):

Tune-Up Conducted By: DEAN BOILER

Hand Held Analyzer Type/Model #: TESTO 331

Last Calibration Date of Analyzer: 7/2020

Requirement		Description	Inspector Comments/ Corrective Actions Taken[d] Burner #1			Inspector Comments/ Corrective Actions Taken[d] Burner #2 (if applicable)		
☒	Inspect the burner[b]	Clean or replace any components of the burner, as necessary	ALL SATISFACTORY REFRACTORY – GOOD			N/A		
☒	Inspect the flame pattern	Adjust the burner as necessary to optimize the flame pattern. The adjustment should be consistent with the manufacturer's specifications, if available.	GOOD PATTERN			N/A		
☒	Inspect air-to-fuel ratio control system[b]	Ensure system is calibrated and functioning properly, if such a system is installed on the boiler/process heater	FIREYE NEXUS			N/A		
☒	Optimize emissions of carbon monoxide (CO)	Optimize emissions consistent with the manufacturer's specifications, if available, and with any nitrogen oxide requirement to which the boiler/process heater is subject.				N/A		
☒	Measure CO and O2 levels in exhaust, before and after tune-up[c]	LOW 6.1% O2 25 to 270°F MID 6.2% O2 6 CO 325°F HIGH 5.5 % O2 0 CO 378°F	Parameter	Before	After	Parameter	Before	After
			Basis (wet or dry)			Basis (wet or dry)		
			CO (ppmv)			CO (ppmv)		
			O2 (% by volume)			O2 (% by volume)		
			Comments[d]			Comments[d]		

SATISFACTORY

b You may delay the inspection until the next scheduled unit shut down, but you must inspect each burner at least once every 36 months if subject to biennial tune-ups, and at least once every 72 months if subject to 5-year tune-ups.

c Measurements may be made on either a dry or wet basis, as long as it is the same basis before and after the tune-up adjustments are made. CO concentration measurements must be made in units of parts per million by volume (ppmv). Oxygen (O2) concentration measurements must be made as percent by volume. Measurements may be taken using a portable analyzer.

d Fill this form in completely with comments where noted. Additional comments can be detailed below, as necessary.

ADDITIONAL COMMENTS:

Additional Guidance

What if manufacturer's specifications are not available?

The appropriate range within which to manage excess oxygen depends on the fuel type and the method of monitoring and controlling flue gas oxygen content. The following table provides some general information of the typical control limits for steam boilers. The data represented in this table indicates the *expected* operating range for boilers.

The numerical values in the table represent the amount of oxygen (O2) in the flue gas as it exits the combustion zone. This is the actual field measurement for most boilers and it is the common control parameter. The oxygen concentrations noted in the table are "wet basis" measurements and "dry basis" measurement). The rule [§63.11223(b)(5)]) allows measurements on either a dry or wet basis as long as it is the same before and after the adjustments are made.

The two designations in the table are *automatic control* and *positioning control*. *Positioning control* is generally not equipped with continuous flue gas oxygen measurement. The more efficient control is *automatic control*. *Automatic control* (or *continuous automatic control*) continually monitors oxygen content and combustion air flow is trimmed to maintain required oxygen limits, sometimes referred to as *oxygen trim control*.

Typical Flue Gas Oxygen Content Control Parameters								
Fuel	Automatic Control Flue Gas O_2 Content				Positioning Control Flue Gas O_2 Content			
	Minimum		Maximum		Minimum		Maximum	
	Wetl Gas Sample [%]	Dry Gas Sample [%]	Wetl Gas Sample [%]	Dry Gas Sample [%]	Wet Gas Sample [%]	Dry Gas Sample [%]	Wet Gas Sample [%]	Dry Gas Sample [%]
Natural Gas	1.5	1.8	3.0	3.6	3.0	3.6	7.0	8.0

Wet vs. Dry Basis Gas Sample

The measurement distinction of dry versus wet is based in the manner in which the water-vapor in the sample is managed. A wet based oxygen concentration identifies the amount of oxygen with respect to all of the other flue gas constituents. A dry based oxygen concentration measures the oxygen content of the flue gas sample after the water-vapor has been condensed and removed from the sample. This measurement distinction is important for many reasons and it is critical to note that different instruments provide measurements with one or the other of these bases.

FGEXTRACTION

Request was made for records of any variance that occurred (sparge deck temp below 195° or %LEL greater than 50%).

There have been no variances after the initial start-up period.

Scott Duncan

From: Bob Roesner <broesner@rbeincorporated.com>
Sent: Wednesday, September 23, 2020 2:12 PM
To: Scott Duncan
Subject: Ithaca Cooling Tower

Scott,
I just wanted to confirm that the cooling towers at Ithaca meet the requirements of a .005 %.

Kind Regards,

Bob Roesner
President

RBE INCORPORATED
4822 Joslyn Road | Orion, MI 48359
D: (248) 874-2006 | M: (248) 841=3795
www.rbeincorporated.com

Date	Extraction Solvent Received (gal)	HAP %
8/4/2020	6,858.14	47.39
8/25/2020	6,798.60	47.39
9/1/2020	7,908.93	47.10
9/28/2020	6,921.19	47.10
10/14/2020	6,896.67	47.10
10/16/2020	6,850.86	62.75
11/2/2020	8,035.03	65.61
12/21/2020	6,973.73	65.61
12/16/2020	6,900.18	65.61
1/14/2021	8,588.44	48.50
1/8/2021	6,931.70	62.10
2/10/2021	7,145.36	48.50
2/3/2021	7,429.07	65.32
3/31/2021	8,171.63	48.28
3/30/2021	7,887.92	64.20
5/4/2021	7,877.41	65.23
5/6/2021	6,973.73	48.28
7/21/2021	7,124.34	63.07
7/20/2021	6,693.52	53.40
9/14/2021	7,730.30	48.92
10/5/2021	6,644.48	62.62
10/4/2021	6,879.16	48.92
11/5/2021	7,096.32	48.92
11/23/2021	7,110.33	48.92
12/16/2021	6,984.24	46.98
12/13/2021	7,418.56	64.61
1/4/2022	7,054.29	48.28
1/24/2022	7,050.79	48.28
2/8/2022	8,185.64	45.42
2/25/2022	7,054.50	46.23
3/18/2022	7,863.39	46.23
4/12/2022	6,931.70	46.14
5/2/2022	6,434.33	47.28
5/4/2022	6,802.10	47.28
5/20/2022	6,430.82	47.28
6/6/2022	7,901.93	47.28
6/24/2022	7,894.92	47.28

ZFS Ithaca, LLC

Visible Emmisssions Observations of Haul Roads

Date:	Monday 11-1-21	Tuesday 11-2-21	Wednesday 11-3-21	Thursday 11-4-21	Friday 11-5-21	Saturday 11-6-21	Sunday 11-7-21
Truck Traffic Present Today?	(Yes) / No	(Yes) / No	(Yes) / No	(Yes) / No	(Yes) / No	(Yes) / No	Yes / (No)

Indicate "Yes" for visual observations of dust. Otherwise, indicate "No."

AREA 1: Was dust visually observed on haul road from gate entrance to scale?	Yes / (No)	Yes / (No)	Yes / (No)	Yes / (No)	Yes / (No)	Yes / (No)	Yes / (No)
AREA 2: Was dust visually observed on haul road from scale to loadout?	Yes / (No)	Yes / (No)	Yes / (No)	Yes / (No)	Yes / (No)	Yes / (No)	Yes / (No)
AREA 3: Was dust visually observed on haul road from loadout to receiving?	Yes / (No)	Yes / (No)	Yes / (No)	Yes / (No)	Yes / (No)	Yes / (No)	Yes / (No)
AREA 4: Was dust visually observed on oil truck loadout loop?	Yes / (No)	Yes / (No)	Yes / (No)	Yes / (No)	Yes / (No)	Yes / (No)	Yes / (No)
Comments (excessive dust, rain, snow, ice, spilled produts, excessive speed, etc)	N/A	N/A	N/A	N/A	N/A	N/A	N/A.
Initials of Observer	T.A.	T.A.	KS	BP	T.A.	T.A.	T.A.

Comment with any corrective action taken and provide initials. Otherwise, indicate "NA"

	Monday	Tuesday	Wednesday	Thursday	Friday	Saturday	Sunday
Corrective Action Taken?	Yes / (No)	Yes / (No)	Yes / (No)	Yes / (No)	Yes / (No)	Yes / (No)	Yes / (No)
Comments and Initials	T.A.	T.A.	KS	BP	T.A.	T.A.	T.A.

ZFS Ithaca, LLC

Visible Emmisssions Observations of Haul Roads

Date:	Monday 11/08/21	Tuesday 11/09/21	Wednesday 10-10-21	Thursday 11-11-21	Friday 11-12-21	Saturday 11/13/21	Sunday 11/14/21
Truck Traffic Present Today?	(Yes) / No	(Yes) / No	(Yes) / No	(Yes) / No	(Yes) / No	Yes / (No)	Yes / (No)

Indicate "Yes" for visual observations of dust. Otherwise, indicate "No."

AREA 1: Was dust visually observed on haul road from gate entrance to scale?	Yes / (No)	Yes / (No)	Yes / (No)	Yes / (No)	Yes / (No)	Yes / (No)	Yes / (No)
AREA 2: Was dust visually observed on haul road from scale to loadout?	Yes / (No)	Yes / (No)	Yes / (No)	Yes / (No)	Yes / (No)	Yes / (No)	Yes / (No)
AREA 3: Was dust visually observed on haul road from loadout to receiving?	Yes / (No)	Yes / (No)	Yes / (No)	Yes / (No)	Yes / (No)	Yes / (No)	Yes / (No)
AREA 4: Was dust visually observed on oil truck loadout loop?	Yes / (No)	Yes / (No)	Yes / (No)	Yes / (No)	Yes / (No)	Yes / (No)	Yes / (No)
Comments (excessive dust, rain, snow, ice, spilled produts, excessive speed, etc)			N.A	N. A.	~~Rain~~ RS		~~Rain~~ Snow
Initials of Observer	RS	RS	T.A.	T. A	~~T. A~~ RS	RS	RS

Comment with any corrective action taken and provide initials. Otherwise, indicate "NA"

	Monday	Tuesday	Wednesday	Thursday	Friday	Saturday	Sunday
Corrective Action Taken?	Yes / (No)	Yes / (No)	Yes / (No)	Yes / (No)	Yes / (No)	Yes / (No)	Yes / (No)
Comments and Initials	RS	RS	T. A.	T. A.	RS ~~T. A.~~	RS	RS

ZFS Ithaca, LLC

Visible Emmisssions Observations of Haul Roads

Date:	Monday 11-15-21	Tuesday 11-16-21	Wednesday 11-17-21	Thursday 11/18/21	Friday 11-19-21	Saturday 11-20-21	Sunday 11-21-21
Truck Traffic Present Today?	(Yes) / No	(Yes) / No	(Yes) / No	(Yes) / No	(Yes) / No	(Yes) / No	~~Yes~~ T.A / No

Indicate "Yes" for visual observations of dust. Otherwise, indicate "No."

AREA 1: Was dust visually observed on haul road from gate entrance to scale?	Yes / (No)	Yes / (No)	Yes / (No)	Yes / (No)	Yes / (No)	Yes / (No)	Yes / (No)
AREA 2: Was dust visually observed on haul road from scale to loadout?	Yes / (No)	Yes / (No)	Yes / (No)	Yes / (No)	Yes / (No)	Yes / (No)	Yes / (No)
AREA 3: Was dust visually observed on haul road from loadout to receiving?	Yes / (No)	Yes / (No)	Yes / (No)	Yes / (No)	Yes / (No)	Yes / (No)	Yes / (No)
AREA 4: Was dust visually observed on oil truck loadout loop?	Yes / (No)	Yes / (No)	Yes / (No)	Yes / (No)	Yes / (No)	Yes / (No)	Yes / (No)
Comments (excessive dust, rain, snow, ice, spilled produts, excessive speed, etc)	N/A	N/A	Rain	N/A	N/A	N/A	N/A
Initials of Observer	T.A.	T.A.	RS	RS	T.A	T.A	T.A

Comment with any corrective action taken and provide initials. Otherwise, indicate "NA"

	Monday	Tuesday	Wednesday	Thursday	Friday	Saturday	Sunday
Corrective Action Taken?	Yes / (No)	Yes / (No)	Yes / (No)	Yes / (No)	Yes / (No)	Yes / (No)	Yes / (No)
Comments and Initials	T.A.	T.A.	RS	RS	T.A.	T.A.	T.A.

ZFS Ithaca, LLC

Visible Emmisssions Observations of Haul Roads

Date:	Monday 11/22/21	Tuesday 11/23/21	Wednesday 11-24-21	Thursday 11-25-21	Friday 11-26-21	Saturday 11-27-21	Sunday 11-28-21
Truck Traffic Present Today?	(Yes) / No	(Yes) / No	(Yes) / No	Yes / (No)	(Yes) / No	Yes / (No)	Yes / (No)

Indicate "Yes" for visual observations of dust. Otherwise, indicate "No."

AREA 1: Was dust visually observed on haul road from gate entrance to scale?	Yes / (No)	Yes / (No)	Yes / (No)	Yes / (No)	Yes / (No)	Yes / (No)	Yes / (No)
AREA 2: Was dust visually observed on haul road from scale to loadout?	Yes / (No)	Yes / (No)	Yes / (No)	Yes / (No)	Yes / (No)	Yes / (No)	Yes / (No)
AREA 3: Was dust visually observed on haul road from loadout to receiving?	Yes / (No)	Yes / (No)	Yes / (No)	Yes / (No)	Yes / (No)	Yes / (No)	Yes / (No)
AREA 4: Was dust visually observed on oil truck loadout loop?	Yes / (No)	Yes / (No)	Yes / (No)	Yes / (No)	Yes / (No)	Yes / (No)	Yes / (No)
Comments (excessive dust, rain, snow, ice, spilled produts, excessive speed, etc)	R		N/A	Rain		Snow	snow
Initials of Observer	RS	RS	T.A.	T.A.	RS	RS	RS

Comment with any corrective action taken and provide initials. Otherwise, indicate "NA"

	Monday	Tuesday	Wednesday	Thursday	Friday	Saturday	Sunday
Corrective Action Taken?	Yes / (No)	Yes / (No)	Yes / (No)	Yes / (No)	Yes / (No)	Yes / (No)	Yes / (No)
Comments and Initials	RS	RS	T.A.	T.A.	RS	RS	RS

WEEKLY AIR MONITORING FORM
SHIP/RECEIVE OPACITY READINGS

Week of: 8-2-21
WEEK STARTS ON MONDAY

Supervisor: Ryan Smith

Operator Initials: KLO

Date: 8-2-21

Start Time: 900

OPACITY TRUCK LOADOUT Meal, Hulls, Pellets	
[limit: Average < 10%]	
0:00	0 %
0:15	0 %
0:30	0 %
0:45	0 %
1:00	0 %
1:15	0 %
1:30	0 %
1:45	0 %
2:00	0 %
2:15	0 %
2:30	0 %
2:45	0 %
3:00	0 %
3:15	0 %
3:30	0 %
3:45	0 %
4:00	0 %
4:15	0 %
4:30	0 %
4:45	0 %
5:00	0 %
5:15	0 %
5:30	0 %
5:45	0 %
Average	0 %

Operator Initials: SB

☑ No Railcars Unloaded For Entire Week During Daylight Hours

Date:

Start Time:

OPACITY RAIL RECEIVING Ingredients	
[limit: Average < 10%]	
0:00	%
0:15	%
0:30	%
0:45	%
1:00	%
1:15	%
1:30	%
1:45	%
2:00	%
2:15	%
2:30	%
2:45	%
3:00	%
3:15	%
3:30	%
3:45	%
4:00	%
4:15	%
4:30	%
4:45	%
5:00	%
5:15	%
5:30	%
5:45	%
Average	%

Operator Initials: KLO

Date: 8-2-21

Start Time: 1105

OPACITY RAIL LOADOUT Meal, Hulls, Pellets	
[limit: Average < 10%]	
0:00	0 %
0:15	0 %
0:30	0 %
0:45	0 %
1:00	0 %
1:15	0 %
1:30	0 %
1:45	0 %
2:00	0 %
2:15	0 %
2:30	0 %
2:45	0 %
3:00	0 %
3:15	0 %
3:30	0 %
3:45	0 %
4:00	0 %
4:15	0 %
4:30	0 %
4:45	0 %
5:00	0 %
5:15	0 %
5:30	0 %
5:45	0 %
Average	0 %

Operator Initials: SB

☑ No Trucks Loaded For Entire Week During Daylight Hours

Date:

Start Time:

OPACITY TRUCK LOADOUT Flat Storage	
[limit: Average < 10%]	
0:00	%
0:15	%
0:30	%
0:45	%
1:00	%
1:15	%
1:30	%
1:45	%
2:00	%
2:15	%
2:30	%
2:45	%
3:00	%
3:15	%
3:30	%
3:45	%
4:00	%
4:15	%
4:30	%
4:45	%
5:00	%
5:15	%
5:30	%
5:45	%
Average	%

**Opacity must be observed during daylight hours while the unit is operating.*

Comments/Corrective Actions:

WEEKLY AIR MONITORING FORM
SHIP/RECEIVE OPACITY READINGS

Week of: 8-9-21

WEEK STARTS ON MONDAY

Supervisor: [signature]

Operator Initials: RLO	**Operator Initials:**	**Operator Initials:** RLO	**Operator Initials:**
	☒ No Railcars Unloaded For Entire Week During Daylight Hours		☒ No Trucks Loaded For Entire Week During Daylight Hours
Date: 8-9-21	**Date:**	**Date:** 8-10-21	**Date:**
Start Time: 1200	**Start Time:**	**Start Time:** 1400	**Start Time:**

OPACITY TRUCK LOADOUT Meal, Hulls, Pellets		OPACITY RAIL RECEIVING Ingredients		OPACITY RAIL LOADOUT Meal, Hulls, Pellets		OPACITY TRUCK LOADOUT Flat Storage	
[limit: Average < 10%]		[limit: Average < 10%]		[limit: Average < 10%]		[limit: Average < 10%]	
0:00	0 %	0:00	%	0:00	0 %	0:00	%
0:15	0 %	0:15	%	0:15	0 %	0:15	%
0:30	0 %	0:30	%	0:30	0 %	0:30	%
0:45	0 %	0:45	%	0:45	0 %	0:45	%
1:00	0 %	1:00	%	1:00	0 %	1:00	%
1:15	0 %	1:15	%	1:15	0 %	1:15	%
1:30	0 %	1:30	%	1:30	0 %	1:30	%
1:45	0 %	1:45	%	1:45	0 %	1:45	%
2:00	0 %	2:00	%	2:00	0 %	2:00	%
2:15	0 %	2:15	%	2:15	0 %	2:15	%
2:30	0 %	2:30	%	2:30	0 %	2:30	%
2:45	0 %	2:45	%	2:45	0 %	2:45	%
3:00	0 %	3:00	%	3:00	0 %	3:00	%
3:15	0 %	3:15	%	3:15	0 %	3:15	%
3:30	0 %	3:30	%	3:30	0 %	3:30	%
3:45	0 %	3:45	%	3:45	0 %	3:45	%
4:00	0 %	4:00	%	4:00	0 %	4:00	%
4:15	0 %	4:15	%	4:15	0 %	4:15	%
4:30	0 %	4:30	%	4:30	0 %	4:30	%
4:45	0 %	4:45	%	4:45	0 %	4:45	%
5:00	0 %	5:00	%	5:00	0 %	5:00	%
5:15	0 %	5:15	%	5:15	0 %	5:15	%
5:30	0 %	5:30	%	5:30	0 %	5:30	%
5:45	0 %	5:45	%	5:45	0 %	5:45	%
Average	0 %	***Average***	%	***Average***	0 %	***Average***	%

**Opacity must be observed during daylight hours while the unit is operating.*

Comments/Corrective Actions:

WEEKLY AIR MONITORING FORM
SHIP/RECEIVE OPACITY READINGS

Week of: 8-16-21

WEEK STARTS ON MONDAY

Supervisor: [signature]

Operator Initials: T. A.	**Operator Initials:** BMO	**Operator Initials:** T.A.	**Operator Initials:** BMO
	☒ No Railcars Unloaded For Entire Week During Daylight Hours		☒ No Trucks Loaded For Entire Week During Daylight Hours
Date: 8-18-21	**Date:**	**Date:** 8-18-21	**Date:**
Start Time: 11:00	**Start Time:**	**Start Time:** 12:00	**Start Time:**

OPACITY TRUCK LOADOUT Meal, Hulls, Pellets [limit: Average < 10%]			OPACITY RAIL RECEIVING Ingredients [limit: Average < 10%]		OPACITY RAIL LOADOUT Meal, Hulls, Pellets [limit: Average < 10%]		OPACITY TRUCK LOADOUT Flat Storage [limit: Average < 10%]	
0:00	0	%	0:00	%	0:00	0 %	0:00	%
0:15	0	%	0:15	%	0:15	0 %	0:15	%
0:30	0	%	0:30	%	0:30	0 %	0:30	%
0:45	0	%	0:45	%	0:45	0 %	0:45	%
1:00	0	%	1:00	%	1:00	0 %	1:00	%
1:15	0	%	1:15	%	1:15	0 %	1:15	%
1:30	0	%	1:30	%	1:30	0 %	1:30	%
1:45	0	%	1:45	%	1:45	0 %	1:45	%
2:00	0	%	2:00	%	2:00	0 %	2:00	%
2:15	0	%	2:15	%	2:15	0 %	2:15	%
2:30	0	%	2:30	%	2:30	0 %	2:30	%
2:45	0	%	2:45	%	2:45	0 %	2:45	%
3:00	0	%	3:00	%	3:00	0 %	3:00	%
3:15	0	%	3:15	%	3:15	0 %	3:15	%
3:30	0	%	3:30	%	3:30	0 %	3:30	%
3:45	0	%	3:45	%	3:45	0 %	3:45	%
4:00	0	%	4:00	%	4:00	0 %	4:00	%
4:15	0	%	4:15	%	4:15	0 %	4:15	%
4:30	0	%	4:30	%	4:30	0 %	4:30	%
4:45	0	%	4:45	%	4:45	0 %	4:45	%
5:00	0	%	5:00	%	5:00	0 %	5:00	%
5:15	0	%	5:15	%	5:15	0 %	5:15	%
5:30	0	%	5:30	%	5:30	0 %	5:30	%
5:45	0	%	5:45	%	5:45	0 %	5:45	%
Average	0	%	***Average***	%	***Average***	0 %	***Average***	%

**Opacity must be observed during daylight hours while the unit is operating.*

Comments/Corrective Actions:

WEEKLY AIR MONITORING FORM
SHIP/RECEIVE OPACITY READINGS

Week of: 8-23-21

WEEK STARTS ON MONDAY

Supervisor: [signature]

Operator Initials: RLO

Date: 8-23-21

Start Time: 12:00

OPACITY TRUCK LOADOUT Meal, Hulls, Pellets	
[limit: Average < 10%]	
0:00	0 %
0:15	0 %
0:30	0 %
0:45	0 %
1:00	0 %
1:15	0 %
1:30	0 %
1:45	0 %
2:00	0 %
2:15	0 %
2:30	0 %
2:45	0 %
3:00	0 %
3:15	0 %
3:30	0 %
3:45	0 %
4:00	0 %
4:15	0 %
4:30	0 %
4:45	0 %
5:00	0 %
5:15	0 %
5:30	0 %
5:45	0 %
Average	0 %

Operator Initials:

Date:

Start Time:

OPACITY RAIL RECEIVING Ingredients	
[limit: Average < 10%]	
0:00	%
0:15	%
0:30	%
0:45	%
1:00	%
1:15	%
1:30	%
1:45	%
2:00	%
2:15	%
2:30	%
2:45	%
3:00	%
3:15	%
3:30	%
3:45	%
4:00	%
4:15	%
4:30	%
4:45	%
5:00	%
5:15	%
5:30	%
5:45	%
Average	%

☒ No Railcars Unloaded For Entire Week During Daylight Hours

Operator Initials: RLO

Date: 8-24-21

Start Time: 1:00

OPACITY RAIL LOADOUT Meal, Hulls, Pellets	
[limit: Average < 10%]	
0:00	0 %
0:15	0 %
0:30	0 %
0:45	0 %
1:00	0 %
1:15	0 %
1:30	0 %
1:45	0 %
2:00	0 %
2:15	0 %
2:30	0 %
2:45	0 %
3:00	0 %
3:15	0 %
3:30	0 %
3:45	0 %
4:00	0 %
4:15	0 %
4:30	0 %
4:45	0 %
5:00	0 %
5:15	0 %
5:30	0 %
5:45	0 %
Average	0 %

Operator Initials:

Date:

Start Time:

OPACITY TRUCK LOADOUT Flat Storage	
[limit: Average < 10%]	
0:00	%
0:15	%
0:30	%
0:45	%
1:00	%
1:15	%
1:30	%
1:45	%
2:00	%
2:15	%
2:30	%
2:45	%
3:00	%
3:15	%
3:30	%
3:45	%
4:00	%
4:15	%
4:30	%
4:45	%
5:00	%
5:15	%
5:30	%
5:45	%
Average	%

☒ No Trucks Loaded For Entire Week During Daylight Hours

**Opacity must be observed during daylight hours while the unit is operating.*

Comments/Corrective Actions: